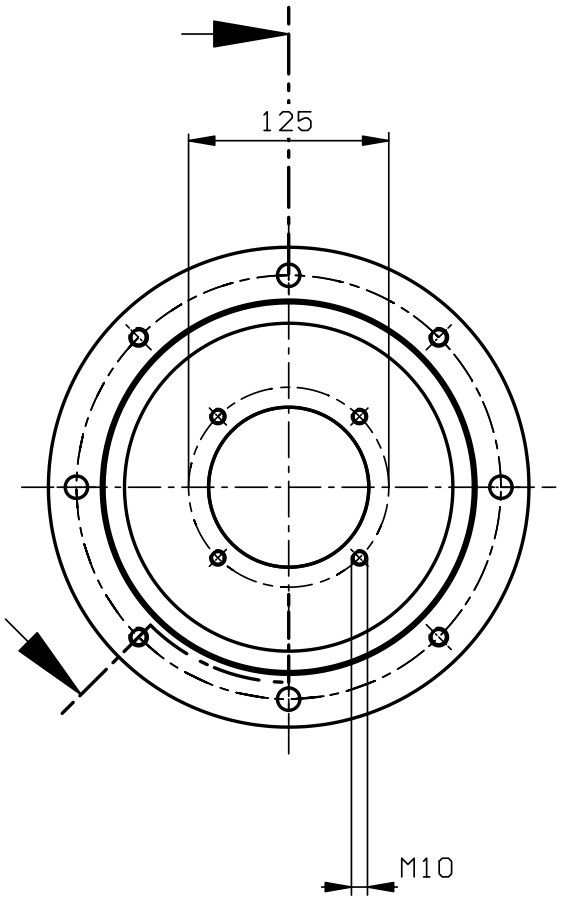

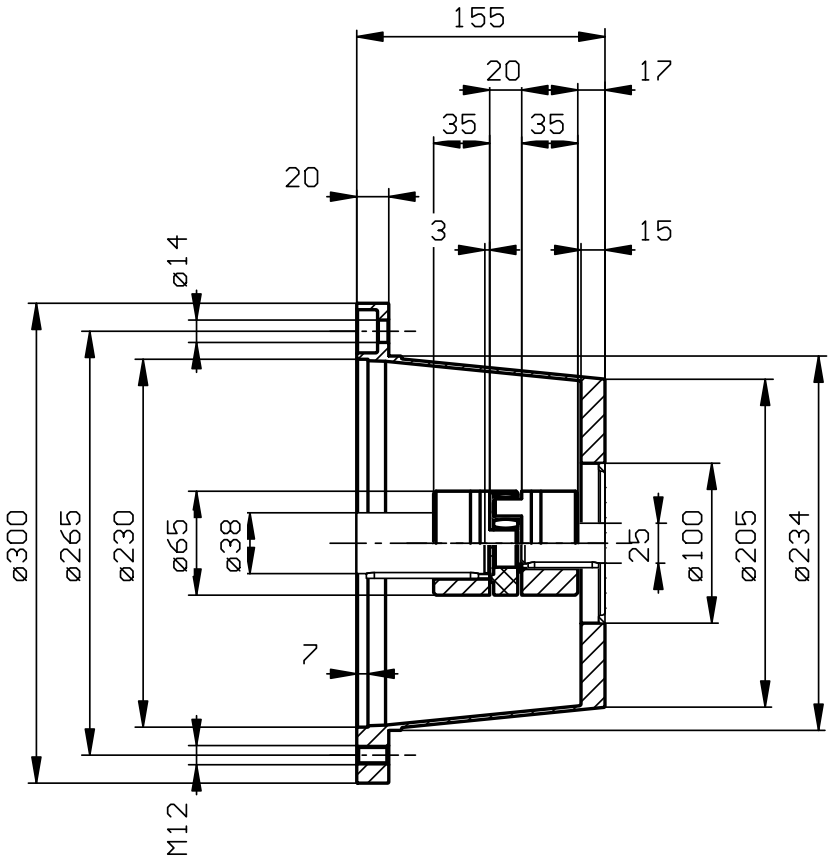

Pos. : 22 + 23

E-Motor size: 132M 7.50 kW (IEC standardized motor, flange diameter: 300 mm, B5/V1, IP 54, 50 Hz 1500 1/min)
pump manufacturer : PARKER - HANNIFIN pump type : PV028.1K.....
(If the weight is changed by assemblies or additional pumps, please consult with KTR Rheine)

Order details

Pos.	No	Description		Part Number
5	1	ROTEX 28 ST	Large hub Ø25H7 keyway to DIN	020285102500
4	1	ROTEX 28 ST	Large hub Ø38H7 keyway to DIN	020285103800
3	1	ROTEX 28	Spider 92 Shore A YELLOW	020281000001
2	1	COUPLING	R28.38-25 (Pos 3 - 5)	
1	1	BELLHOUSING	PK 300/04/21-00	103026042100

Mass- und Konstruktionsänderungen behalten wir uns vor.
We reserve the right to make dimensional and design changes.

Schutzvermerk nach DIN 34 beachten
Note protection mark acc. to DIN 34

Allgemeintoleranz nach DIN ISO 2768-mH
General tolerances acc. to DIN ISO 2768-mH

Masstab Scale	1: 3.33	Format DIN Size	A3

bellhousing
PK 300/04/21-00

KTR Kupplungstechnik GmbH
D-48407 Rheine

DIM ARE IN MM
UNITS ARE ISO METRIC
EXCEPT AS NOTED

Name name	Datum date	Lfd.-Nr. Current number
WEBHydraulik	2009.04.02	10200904021452104