ITEM NO.	DESCRIPTION	DIMENSION	QTY.
1	SEAGUARD STD	∅2500x5500	1
2	UHMW-PE (DARK GREY)	40x400x4500	5
3	BRACKET	30x400x400	2
4	SHACKLE	∅45/50x149	2
5	CHAIN	∅32(4.0D)x12 SL3	2
6	SWIVEL (G-402)	∅38 (1.5in)	2
7	SHACKLE	∅32/35x94	4

PERFORMANCE AT 60% DEFLECTION
ABSORBED ENERGY: 1200 kNm
REACTION FORCE: 1788 kN
HULL PRESSURE: 172kN/m^2

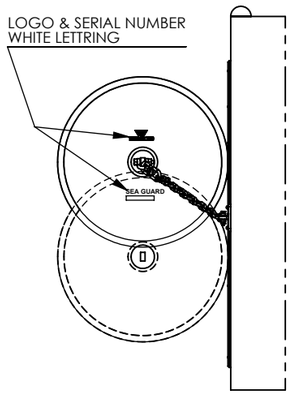

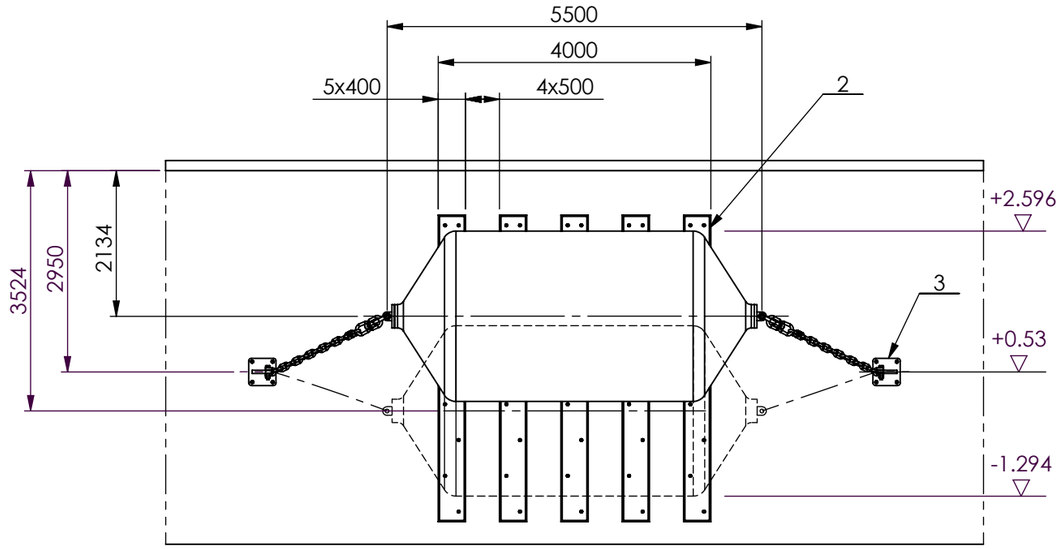

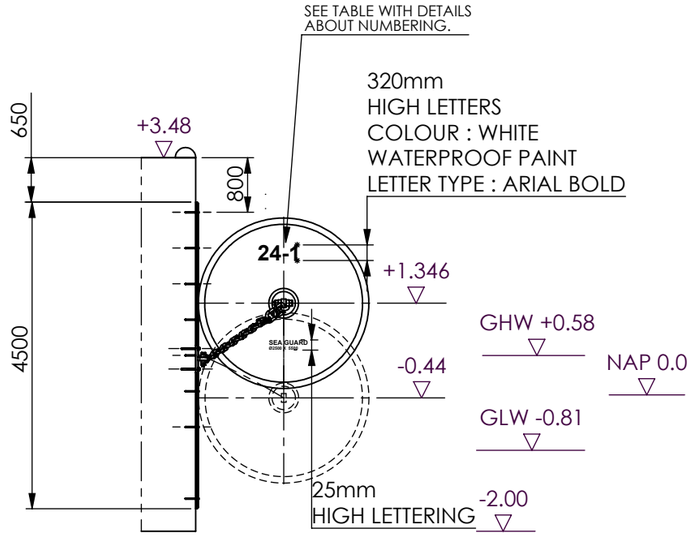

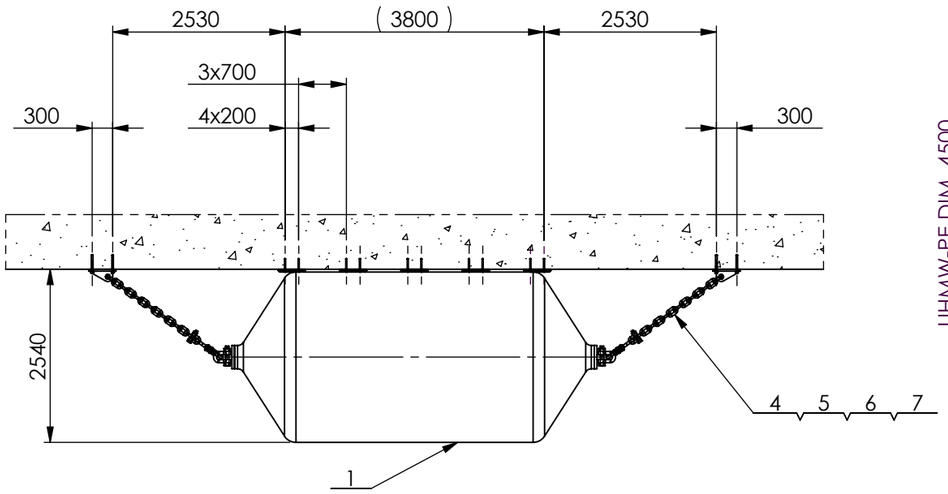

FOOTPRINT @ 60% COMPRESSION

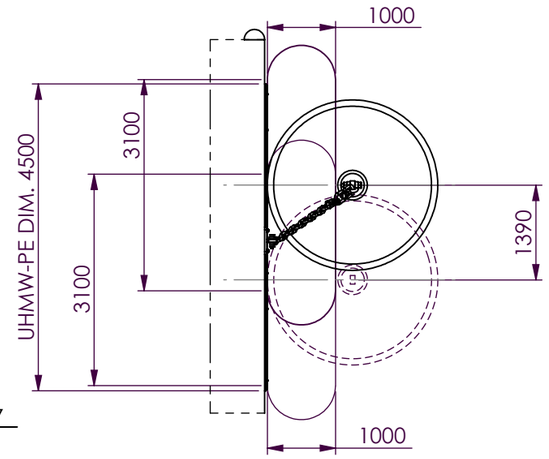

NUMBERING OF FENDERS
24 - 1
24 - 2
24 - 3
24 - 4
24 - 5
24 - 6
24 - 7

Note:
- All dimensions are in mm, UNO
- Fender skin thickness is 23mm

COMMERCIAL IN CONFIDENCE "This document contains confidential information. All rights (including copyright, confidential information, trade secrets and design rights) are owned by Trelleborg AB. No use or disclosure is to be made without prior written permission of Trelleborg AB. Copyright 2016 Trelleborg AB. All rights reserved."

Rev.	DATE	DESCRIPTION	REV. BY	APR. BY	ZONE
B	19/12/16	FENDER SKIN THICKNESS ADDED	HP		
A	02/12/16	ISSUED FOR APPROVAL	HP		

DRAWN	Hardik.Patel
DESIGNED	
CHECKED	Parthiv.Shah
CHECKED	Tessa.Warbout
APPROVED	Tessa.Warbout
SCALE	N T S
SIZE A3	

FOR APPROVAL

Trelleborg Marine Systems EMSA
Trelleborg Industri AB
Henry Dunkers gata 1
SE-231 81 Trelleborg Sweden
Web.: www.trelleborg.com/marine
Tel.: +46 410 51 0000
E-mail: tms.scandinavia@trelleborg.com

TRELLEBORG MARINE SYSTEMS

TMS UK : Tel: +44 1666 511 770 : E-mail: tms.uk@trelleborg.com
TMS Brasil : Tel: + 55 11 5035 1353 : E-mail: tms.brasil@trelleborg.com
TMS France : Tel: +33 4 73 99 01 17 : Email: tms.france@trelleborg.com
TMS Benelux : Tel: +31 180 434 040 : E-mail: tms.benelux@trelleborg.com

TITLE:- GENERAL ARRANGEMENT SEAGUARD Ø2500 X 5500

DRAWING NO :- NLD28276-1M01 Rev. B

PROJECT:- STEIGER 21 EN 24 COMPLEX NIEUWE HAVEN TE DEN HELDER

SHEET: 1 OF 1 VER.:14