Operating Instructions

Precision Balances

XS models

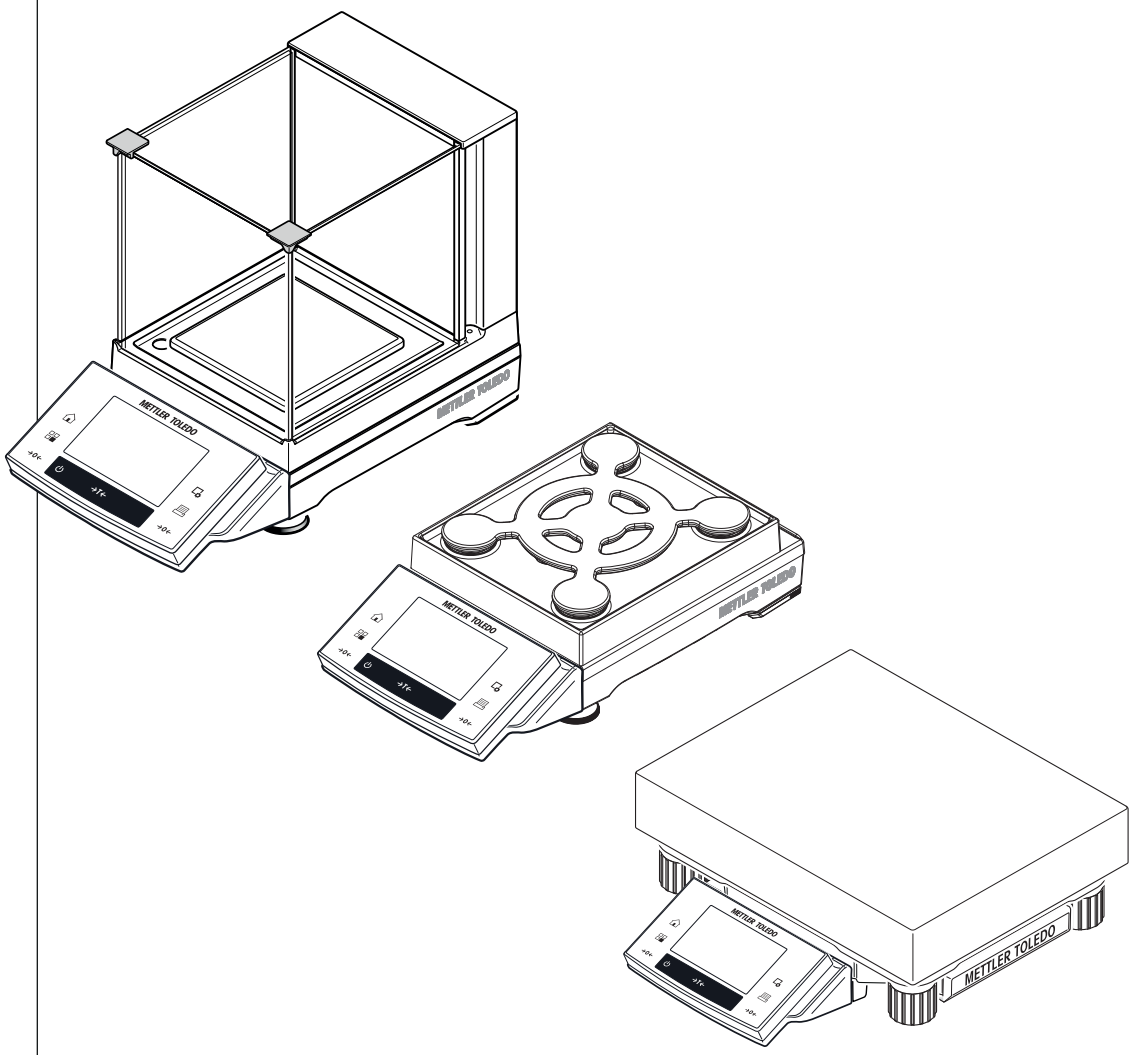

METTLER TOLEDO

Table of Contents

1 Introduction **9**
1.1 Conventions and symbols used in these operating instructions 9

2 Safety Information **10**
2.1 Definition of signal warnings and symbols 10
2.2 Product safety information 10

3 Design and Function **12**
3.1 Overview 12
3.1.1 S weighing platform 12
3.1.2 L weighing platform 13
3.1.3 Terminal 14
3.2 User interface 15
3.2.1 Display 15
3.2.2 Input dialog boxes 16
3.2.3 Firmware 17
3.2.3.1 System settings 17
3.2.3.2 Applications 17
3.2.4 Security system 18

4 Installation and Putting into Operation **20**
4.1 Unpacking 20
4.1.1 Unpacking the "Magic Cube" draft shield 20
4.2 Scope of delivery 20
4.3 Location 21
4.4 Assembling the balance 22
4.4.1 Installing the "Magic Cube" draft shield and weighing pan to the S weighing platform 22
4.4.2 Placing the terminal on the L weighing platform 23
4.4.3 Setting options with the draft shield glass (1 mg Models) 25
4.4.4 Using the additional draft shield door (1 mg Models) 25
4.5 Connecting the balance 26
4.6 Setting up the balance 27
4.6.1 Weighing for the first time 27
4.6.1.1 Switching on the balance 27
4.6.1.2 Leveling the balance 27
4.6.1.3 Performing a simple weighing 28
4.7 Transporting the balance 28
4.7.1 Transport over short distances 29
4.7.2 Transport over long distances 30
4.8 Below-the-balance weighing 30

5 System Settings **32**
5.1 Adjustment/Test 34
5.1.1 Test/Adjustment - weight settings 36
5.1.2 Test sequences 36
5.1.2.1 Method 38
5.1.2.2 Action if failure 44
5.1.3 Tasks 45
5.1.3.1 Assigning a test sequence to a task 46
5.1.4 FACT/int. Adjustment 46
5.1.4.1 Definition of parameters for FACT_XS 47
5.1.5 Test history 48
5.1.6 Protocol – Definition of adjustment and test reports 49
5.2 Weighing parameters 49
5.2.1 Weighing mode 49

5.2.2 Ambient conditions 50
5.2.3 Measured value release 50
5.2.4 AutoZero 50
5.3 Language 51
5.4 Peripherals 51
5.5 Option 53
5.6 Terminal 54
5.6.1 Brightness 54
5.6.2 Contrast 54
5.6.3 Beep 54
5.6.4 Touch function 55
5.6.5 Touch adjustment 55
5.7 Date/Time 55
5.8 Rights 56
5.9 Standby 57
5.10 Switch 57
5.11 Factory 57
5.12 Info 58

6 Weighing Application 59
6.1 Weighing application settings 59
6.1.1 Selecting function keys 61
6.1.1.1 Function key overview 61
6.1.2 Selecting information fields 62
6.1.3 Specifications for automatic protocol printout 63
6.1.4 Selecting weighing units 63
6.1.5 Defining free weighing units 64
6.1.6 Protocol definition 65
6.1.7 Specifications for manual protocol printout 67
6.1.8 Output data formatting (transfer key) 67
6.1.8.1 Output format 68
6.1.8.2 Data output to the printer 69
6.1.9 Definition of identifications 70
6.1.10 Instructions for processing barcode data 70
6.1.11 Instructions for processing keyboard entries 71
6.1.12 MinWeigh function settings 71
6.2 Working with the weighing application 72
6.2.1 Changing the weighing result resolution 72
6.2.2 Working with the lot counter 72
6.2.3 Working with identifications 73
6.2.4 Working with the "MinWeigh" function 74
6.3 Balance adjustment and testing 75
6.3.1 Adjustment 76
6.3.1.1 Fully automatic adjustment FACT 76
6.3.1.2 Adjustment with internal weight 76
6.3.1.3 Adjustment with external test weight 76
6.3.2 Testing 77
6.3.2.1 Testing the adjustment with internal weight 77
6.3.2.2 Testing the adjustment with external test weight 77
6.3.3 Protocols 78
6.3.3.1 Adjustment and test records (sample records) 78
6.4 Working with the test sequence function 80
6.4.1 Starting a task 80
6.4.1.1 EC - eccentric load test 81
6.4.1.2 RP1 - repeatability test 81
6.4.1.3 RPT1 - repeatability test with tare weight 82
6.4.1.4 SE1 - sensitivity test with one weight 82
6.4.1.5 SE2 - sensitivity test with two weights 82

6.4.1.6 SERVICE - reminder 83
6.4.1.7 SET1 - sensitivity test with tare and one test weight 83
6.4.1.8 SET2 - sensitivity test with tare and two test weights 83

7 Statistics Application 85
7.1 Settings for the Statistics application 85
7.1.1 Specific function keys for using statistics 85
7.1.2 Specific information fields for statistics 86
7.1.3 Specific protocol information for statistics 87
7.1.4 Enable additive mode 89
7.2 Working with the Statistics application 90
7.2.1 Capturing statistics from a weighing series 90
7.2.2 Weighing out to a nominal value 92
7.2.3 Example protocol with statistical values 93
7.2.4 Formulas used for the calculation of statistical values 94

8 Formulation Application 96
8.1 Formulation application settings 96
8.1.1 Specific formulation function keys 96
8.1.2 Specific formulation information fields 97
8.1.3 Specific formulation protocol information 98
8.1.4 Specific formulation identifications 99
8.2 Working with the formulation application 100
8.2.1 Initial settings 100
8.2.2 Formulation 101
8.2.3 Sample protocol of a formulation 102

9 Density Application 104
9.1 Density application settings 104
9.1.1 Selecting the density determination method 105
9.1.2 Selecting an auxiliary liquid 105
9.1.3 Activation or deactivation of statistics 105
9.1.4 Specifications for calculation and result display 106
9.1.5 Specific function keys for density determination 106
9.1.6 Specific information fields for density determination 107
9.1.7 Specific protocol information for density determination 108
9.2 Working with the density application 109
9.2.1 Determination of the density of non-porous solids 110
9.2.2 Determination of the density of liquids using a sinker 111
9.2.3 Determination of the density of pasty substances using a gamma sphere 112
9.2.4 Example protocol of a density determination 113
9.3 Using density statistics 114
9.4 Formulae used to calculate density 116
9.4.1 Formulae for determining the density of solids 116
9.4.2 Formulae for determining the density of liquids and pasty substances 116
9.5 Density table for distilled water 117
9.6 Density table for ethanol 117

10 Percent Weighing Application 118
10.1 Settings for percent weighing application 118
10.1.1 Specific function key for percent weighing 118
10.1.2 Specific information fields for percent weighing 119
10.1.3 Additional unit for percent weighing 120
10.1.4 Specific protocol information for percent weighing 120
10.2 Working with the percent weighing application 121
10.2.1 Simple percent weighing 121
10.2.2 Percent weighing to a nominal weight 122
10.2.3 Sample protocol of a percent weighing 123

11 Piece Counting Application **124**
11.1 Piece counting application settings 124
11.1.1 Defining the fixed reference unit quantity 124
11.1.2 Specific function keys for piece counting 125
11.1.3 Specific information fields for piece counting 126
11.1.4 Additional unit for piece counting 127
11.1.5 Specific protocol data for piece counting 127
11.2 Working with the Piece Counting application 129
11.2.1 Simple piece counting 129
11.2.2 Totalizing and acquiring statistics from piece counts 130
11.2.3 Counting to a nominal value 132
11.2.4 Example protocol of a piece count with statistical values 133

12 Dynamic Weighing Application **135**
12.1 Dynamic weighing application settings 135
12.1.1 Specific function keys for dynamic weighing 136
12.1.2 Adapting the application to the dynamic behavior of the weighing material 136
12.1.3 Settings for the start of weighing 137
12.1.4 Settings for the beep at the end of the measurement cycle 137
12.1.5 Settings for the automatic tare function 138
12.1.6 Specific information fields for dynamic weighing 138
12.1.7 Specific protocol data for dynamic weighing 139
12.1.8 Automatic or manual reporting of individual values 140
12.1.9 Selecting the destination for the output data 141
12.1.10 Formatting the output data 141
12.1.11 Activate or deactivate statistics 143
12.2 Working with the Dynamic weighing application 144
12.2.1 Dynamic weighing with automatic start 144
12.2.2 Dynamic weighing with manual start 145
12.2.3 Capturing statistics of dynamic weighing 146
12.2.4 Example protocol of a dynamic weighing 146

13 Maintenance **148**
13.1 Cleaning 148
13.2 Disposal 149
13.3 Firmware (Software) Updates 149
13.3.1 How it Works 149
13.3.2 Update Procedure 149

14 Troubleshooting **151**
14.1 Error messages 151
14.2 Status messages/Status icons 151
14.3 What to do if....? 152

15 Technical Data **153**
15.1 General data S weighing platform 153
15.2 General data L weighing platform 153
15.3 Explanatory notes for the METTLER TOLEDO AC adapter 154
15.4 Model-specific data 155
15.4.1 Balances with readability of 1 mg, S platform with draft shield and SmartPan 155
15.4.2 Balances with readability of 1 mg, S platform with SmartPan 156
15.4.3 Balances with readability of 10 mg, S platform with SmartPan 157
15.4.4 Balances with readability of 0.1 g, S platform 159
15.4.5 Balances with readability of 0.1 g, L platform 161
15.4.6 Balances with readability of 1 g, L platform 163
15.5 Dimensions 164
15.5.1 Balances with readability of 1 mg, S platform with draft shield and SmartPan 164
15.5.2 Balances with readability of 1 mg, S platform with SmartPan 165

15.5.3 Balances with readability of 10 mg, S platform with SmartPan 166
15.5.4 Balances with readability of 0.1 g, S platform 167
15.5.5 Balances with readability of 0.1 g / 1 g, L platform 168
15.6 Interfaces 169
15.6.1 Specifications of RS232C 169
15.6.2 Specifications of "Aux" connection 169

16 Accessories and Spare Parts 170
16.1 Accessories 170
16.2 Spare parts 179

17 Appendix 182
17.1 MT-SICS interface commands and functions 182
17.2 Procedure for certified balances 182
17.3 Recommended printer settings 183

Glossary 185

Index 187

1 Introduction

Thank you for choosing a METTLER TOLEDO balance.

The balances offers numerous weighing and adjustment options with exceptional operating convenience.

The different models have different characteristics regarding equipment and performance. Special notes in the text indicate where this makes a difference to operation.

METTLER TOLEDO is a leading manufacturer of balances for laboratory and production use as well as analytical measuring instruments. A globally present customer service network with highly trained personnel is always available to assist with the selection of accessories or provide advice on the optimal use of the balance.

The balance conforms to current standards and directives. It supports requirements, work techniques and protocols as specified by all international quality assurance systems, e.g. GLP (Good Laboratory Practice), GMP (Good Manufacturing Practice). The balance has a CE Declaration of Conformity and METTLER TOLEDO, as the manufacturer, is certified to ISO 9001 and ISO 14001. This provides the assurance that your capital investment is protected in the long term by high product quality and a comprehensive service package (repairs, maintenance, servicing, adjustment service).

Finding more information

▶ www.mt.com/xs-precision

Software version

These operating instructions refer to the originally installed firmware (software) version V 5.40.

1.1 Conventions and symbols used in these operating instructions

Key and button designations are shown in graphic or text form in square brackets (e.g. [⚙] or [**Define**].

These symbols indicate an instruction:

- prerequisites

1 steps

2 …

⇨ results

This symbol indicates press key briefly (less than 1.5 s).

This symbol indicates press and hold key down (longer than 1.5 s).

2 Safety Information

2.1 Definition of signal warnings and symbols

Safety notes are indicated by signal words and warning symbols and contain warnings and information about safety issues. Ignoring safety notes can lead to personal injury, damage to the instrument, malfunctions and erroneous results.

Signal words

WARNING	for a hazardous situation with medium risk, possibly resulting in severe injuries or death if not avoided.
CAUTION	for a hazardous situation with low risk, resulting in damage to the device or the property or in loss of data or minor or medium injuries if not avoided.
Attention	(no symbol) for important information about the product.
Note	(no symbol) for useful information about the product.

Warning symbols

General hazard

Electrical shock

2.2 Product safety information

Intended use

Your balance is used for weighing. Use the balance exclusively for this purpose. Any other type of use and operation beyond the limits of technical specifications without written consent from Mettler-Toledo AG, is considered as not intended.

It is not permitted to use the instrument in explosive atmosphere of gases, steam, fog, dust and flammable dust (hazardous environments).

General safety information

This balance complies with current industry standards and the recognized safety regulations; however, it can constitute a hazard in use. Do not open the balance housing: The balance contains no user-serviceable parts. In the event of problems, please contact a METTLER TOLEDO representative.

Always operate and use your instrument only in accordance with the instructions contained in this manual. The instructions for setting up your new instrument must be strictly observed.

If the instrument is not used according to these Operating Instructions, protection of the instrument may be impaired and METTLER TOLEDO assumes no liability.

Staff safety

These operating instructions must be read and understood before using the balance. These operating instructions must be retained for future reference.

The balance must not be altered or modified in any way. Only use METTLER TOLEDO original spare parts and accessories.

Safety notes

⚠ WARNING

Risk of electric shock

Use only the original universal AC adapter delivered with your balance, and check that the voltage printed on it is the same as your local power supply voltage. Only plug the adapter into a socket which is grounded.

⚠ CAUTION

Damage to the balance

a) Only use indoors in dry locations.

b) Do not use pointed objects to operate the touch screen!
The balance is of a very sturdy design, but is still a precision instrument. It must be handled with care.

c) Do not open the balance:
The balance contains no user-serviceable parts. In the event of problems, please contact a METTLER TOLEDO representative.

d) Only use METTLER TOLEDO original accessories and peripheral devices for the balance.
These are specifically designed for the balance.

3 Design and Function

3.1 Overview

3.1.1 S weighing platform

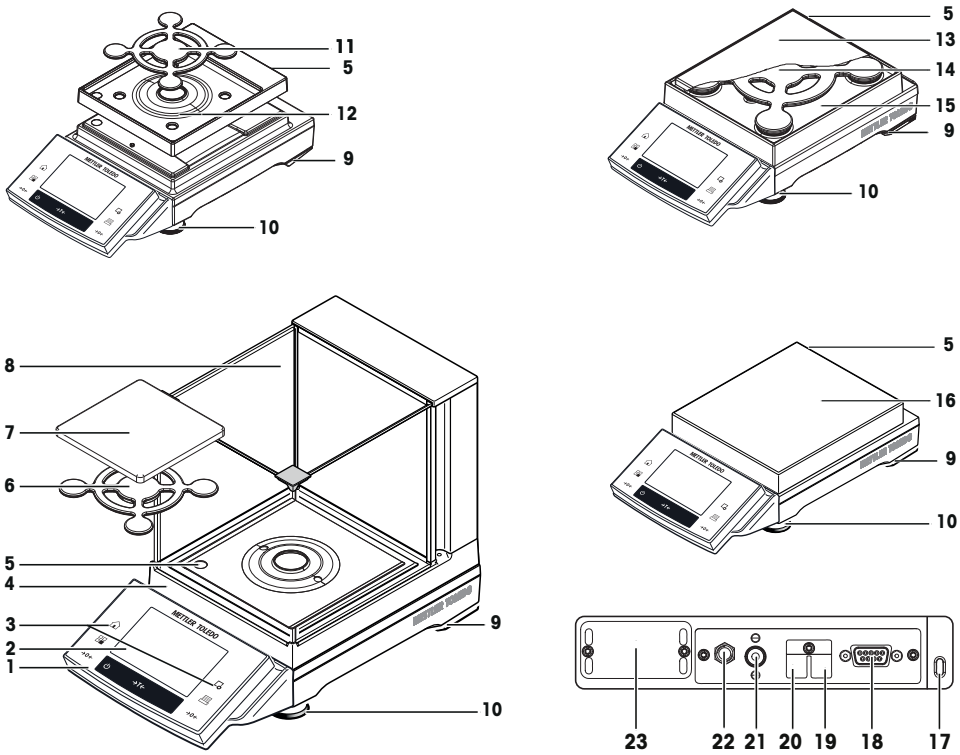

1	Terminal	**2**	Display "Touch screen"
3	Operating keys	**4**	Type designation
5	Level indicator	**6**	SmartPan for 1 mg models with draft shield
7	Weighing pan for 1 mg models with draft shield	**8**	Glass draft shield
9	Safety feet	**10**	Foot screws
11	SmartPan for 1 mg models	**12**	Drip tray for 1 mg models
13	Weighing pan for 5 mg and 10 mg models	**14**	SmartPan for 5 mg and 10 mg models
15	Drip tray for 5 mg and 10 mg models	**16**	Weighing pan for 0.1 g models
17	Fastening point for anti-theft device	**18**	RS232C serial interface
19	Aux 1 (connection for "ErgoSens", hand- or foot-switch)	**20**	Aux 2 (connection for "ErgoSens", hand- or foot-switch)
21	Fastening for auxiliary display stand or terminal stand (optional)	**22**	Socket for AC adapter
23	Slot for second interface (optional)		

3.1.2 L weighing platform

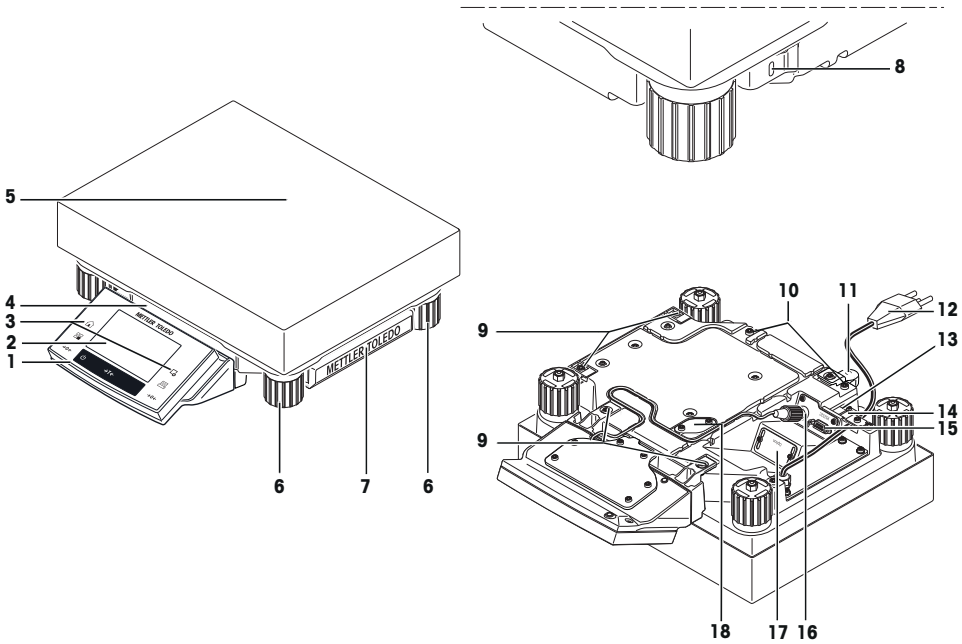

1	Terminal	**2**	Display "Touch screen"
3	Operating keys	**4**	Type designation
5	Weighing pan	**6**	Foot screws
7	Cover	**8**	Fastening point for anti-theft device
9	Points of attachment for terminal or cover	**10**	Fastening for terminal stand (optional)
11	Level indicator	**12**	Power cable
13	Aux 1 (connection for "ErgoSens", hand- or foot-switch)	**14**	Aux 2 (connection for "ErgoSens", hand- or foot-switch)
15	RS232C serial interface	**16**	Connector for terminal cable
17	Slot for second interface (optional)	**18**	Cover plate for below-the-balance weighing (hook optional)

3.1.3 Terminal

Key assignments and terminal connection.

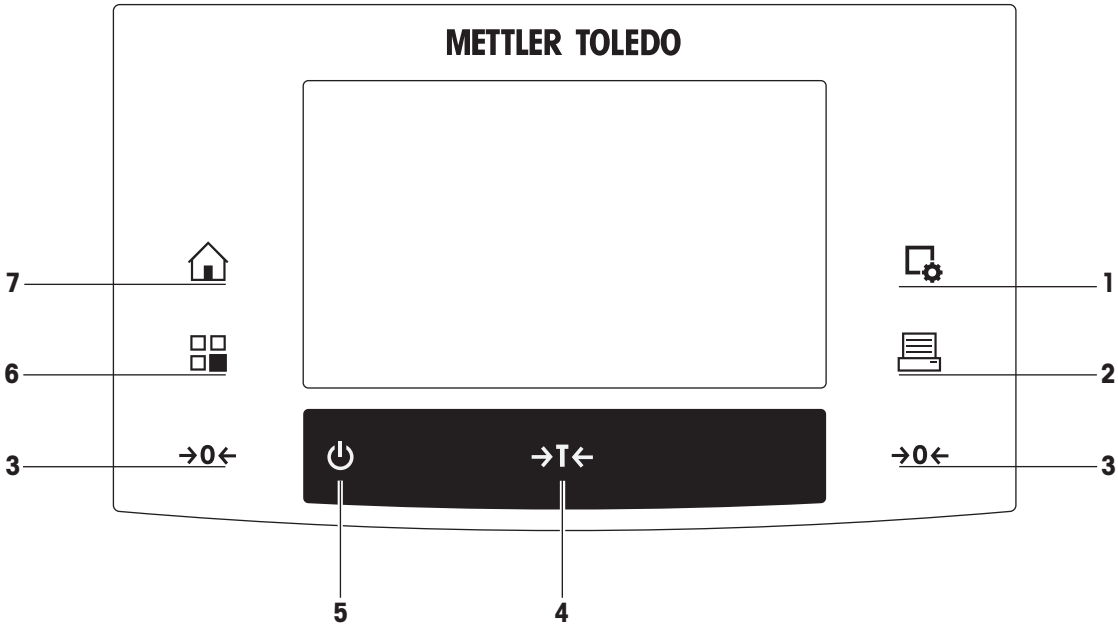

1: Front view

		Designation	Explanation
1		Configuration	For displaying menus for the configuration of a current application. The application can be adjusted to a specific task via numerous settings.
2		Print	This key is used to transfer data via the interface, e.g. to a printer. Other devices, e.g. a PC can also be connected. The data to be transferred can be freely defined.
3	→0←	Zeroing	This key is used for setting a new zero point manually (only required if the balance is used for normal weighings).
4	→T←	Tare	This key is used to tare the balance manually (only necessary for normal weighings). When the balance has been tared, the **Net** symbol is displayed to indicate that all displayed weights are net.
5		On/Off	For switching the balance on and off (standby mode). **Note** It is recommended not to disconnect the balance from the power supply unless it is not going to be used for an extended period.
6		Select application / System	This key is used to select a required application.
7		Home	This key takes you directly from any menu level back to the active application.

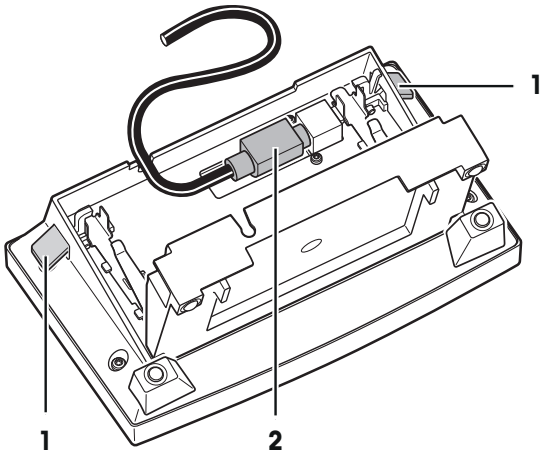

1	Levers	**2**	System connection (terminal cable)

3.2 User interface

3.2.1 Display

The illuminated display of the terminal is a touch screen, i.e. a touch-sensitive screen. It can be used for displaying data, entering settings and selecting functions by tapping the screen.

Note
Depending on country-specific requirements, non-calibrated decimal places are highlighted on approved balances.

⚠ CAUTION

Do not touch the touch screen with pointed or sharp objects!

This may damage the touch screen.

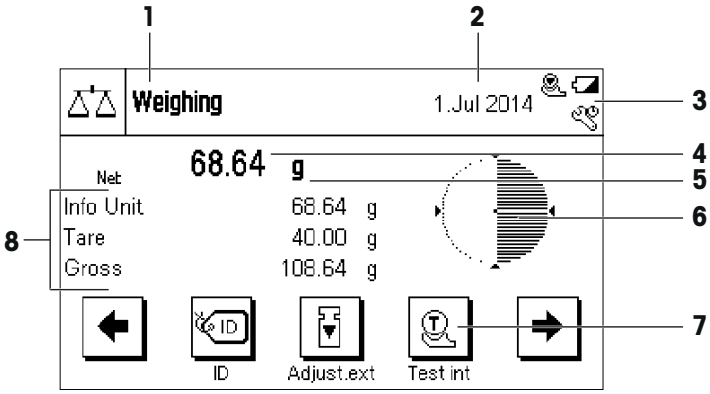

Note
The factory setting of the balance displays the weighing result at a large size, without SmartTrac and information fields.

	Designation	Explanation
1	Application name	Select application. The application menu can be selected by tapping this zone. This menu can also be displayed by pressing [▦].
2	Date	The date can be changed by tapping this zone.

3	Status icons	These status icons indicate special balance statuses (e.g. service due, adjustment required, battery replacement, out of level). If you tap the icon, the function is explained.
4	Weight value	Tapping the weight displays a window showing the result in a large format. This is useful for reading a weight from a certain distance.
5	Weighing unit	The required weighing unit can be changed by tapping the weighing unit, e.g. from **mg** to **g**.
6	SmartTrac	SmartTrac is a graphic weighing-in aid, which shows at a glance an already used and still available weighing range.
7	Function keys	This area is reserved for **Function Keys** enabling direct access to frequently required functions and application settings. If more than 5 function keys are activated, these can be selected with the arrow keys.
8	Information fields	This area is used for displaying additional information (**information fields**) relating to an active application.

Large display

By pressing the function key [**Display**], the weighing result can be displayed larger and still allow the use of the terminal function keys.

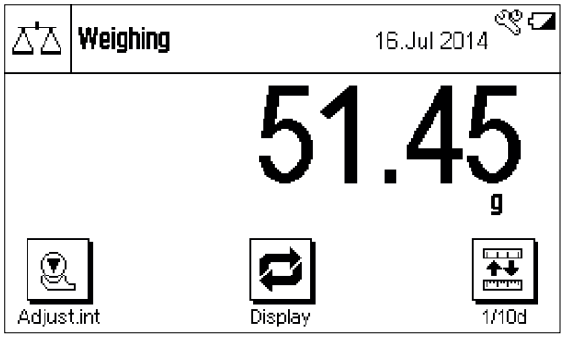

Screen saver

If the balance is not used for 15 minutes, the display is automatically dimmed and the pixels are inverted about every 15 seconds. When the balance is used again (e.g. load weight, press key), the display returns to a normal state.

3.2.2 Input dialog boxes

The keyboard dialog box is used to enter characters such as letters, numbers and special characters.

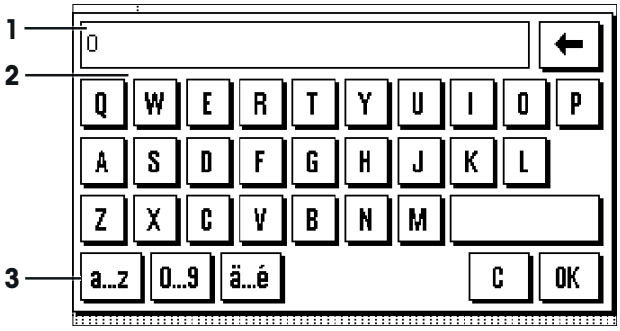

	Designation	Explanation
1	Data field	Displays (entered) alphanumeric and numeric characters.
2	Keyboard	Data input area
3	Selection	Select various keyboard layouts.

1 Enter the designation.

2 Confirm with [**OK**].

	Function
⬅	Delete last character Tap once to place the cursor at the end of the data field.

3.2.3 Firmware

The firmware controls all balance functions. It enables the balance to be adjusted to a specific working environment.

The firmware is divided as follows:

- System settings
- Applications
- Application-specific settings

Note
A displayed menu can be left at any time by repressing the same menu key.

3.2.3.1 System settings

System settings (e.g. settings for peripheral devices) are independent of the applications and apply to the entire weighing system.

Navigation: [⊞] > [**System**]

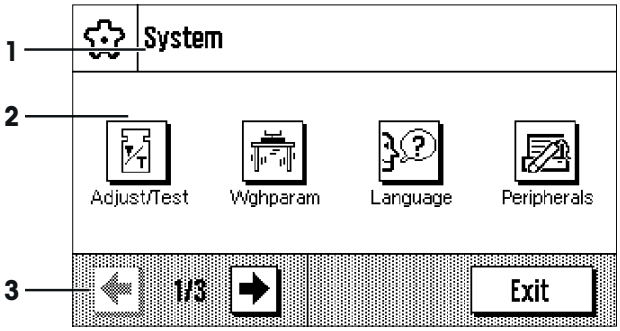

	Designation	Explanation
1	Title bar	The title bar displays elements for user orientation and information.
2	Contents area	The contents area is the main work area for menus and applications. The contents depend on the specific application or initiated action.
3	Action bar	The action bar contains action buttons for performing specific actions required in the active dialog box and are available (e.g. [**Exit**], [**STD**], [**C**], [**OK**]).

1 Settings can be changed by tapping the respective button.

2 To leave the settings, tap [**Exit**].

3.2.3.2 Applications

Applications are firmware modules for performing specific weighing tasks. The balance is delivered with various applications pre-installed. After switching on the balance, the last used application are loaded. The applications are available under the [⊞] key. Instructions for working with standard applications are provided in the respective sections.

Navigation: [⊞]

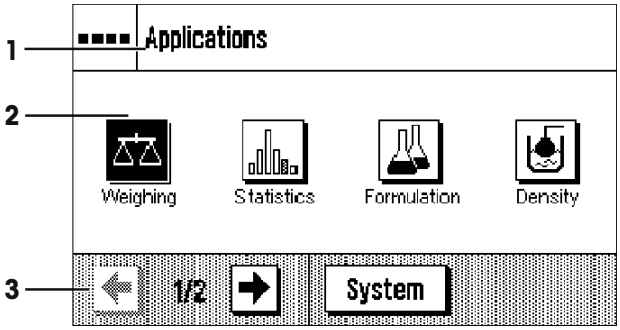

Application-specific settings

These settings can be used to adjust the applications. The available setting options depend on the selected application. Pressing [⚙] opens the multipage menu with settings for a currently active application. Information on the individual setting options is provided in the section relating to the respective application.

Navigation: [⚙]

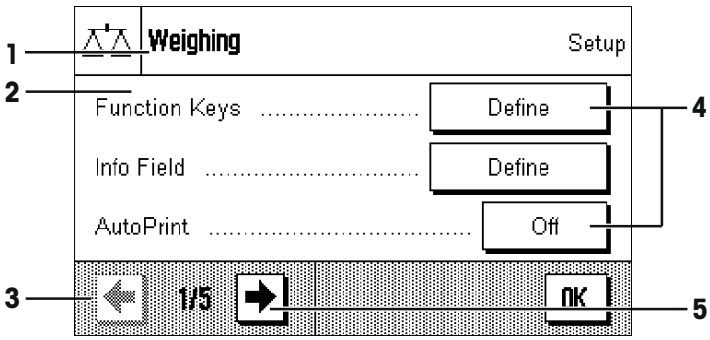

	Designation	Explanation
1	Title bar	The title bar displays elements for orientation and information.
2	Contents area	The contents area is the main work area for menus and applications. The contents depend on the specific application or initiated action.
3	Action bar	The action bar contains action buttons for performing specific actions required in the active dialog box and are available (e.g. [**Exit**], [**STD**], [**C**], [**OK**]).
4	Button	Edit/Select settings (e.g. [**Define**], [**On**], [**Off**]). The contents depend on the application.
5	Arrow	The arrow buttons are used to page forward or back.

1 Settings can be changed by tapping the respective button.

2 Confirm with [**OK**].

3 To leave the settings, select [**Exit**].

4 To change the system settings, tap [**System**].

3.2.4 Security system

The balance has a comprehensive security system with which individual access rights can be defined at administrator. Access to protected menu areas requires the entry of a password. On delivery of the balance, a password is defined. The menu settings are chosen, so that you have unrestricted access to all system settings.

When an password protected menu area is selected, an alphanumeric keyboard is initially displayed for entry of the password.

⚠ CAUTION

Remember passwords!

Protected menu areas cannot be accessed without password.

a) Note passwords and keep them in a safe place.

1 Enter your password.
- Case sensitive, tap the [**a...z**] and [**A...Z**] button to switch between upper and lower case.
- To enter numbers, tap the [**0...9**] button.
- Incorrect entries can be deleted character by character with the arrow key ←.

Note
Entry can be interrupted at any time by tapping [**C**].

2 Enter the password (for security reasons, this is displayed with asterisks instead of plain text) and confirm with [**OK**].

⇨ If the password are correct, the selected menu area is displayed or the required action initiated. If these are incorrect, an error message is displayed with a request to enter them again.

4 Installation and Putting into Operation

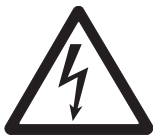

⚠ WARNING

Electrical shock

The balance must be disconnected from the power supply when carrying out all setup and mounting work.

4.1 Unpacking

Open the packaging and carefully remove all components.

4.1.1 Unpacking the "Magic Cube" draft shield

1 Place the draft shield horizontally on a clean surface.

2 Remove the adhesive tape (1).

3 Open the draft shield cover.

4 Pull the cardboard (2) upwards out of the weighing chamber.

5 When removing the cardboard (2), hold the U-shaped draft shield glass so that it is not pulled away with it.

6 Close the draft shield cover.

7 Release the holding strip (3) and pull it upwards to remove it.

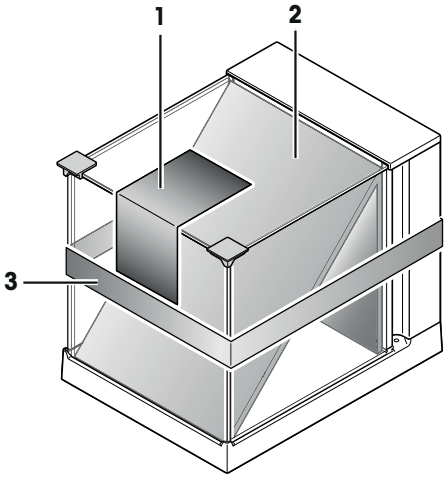

4.2 Scope of delivery

The standard scope of delivery contains the following items:

Components		S platform			
		1 mg with draft shield	1 mg without draft shield	10 mg	0.1 g
Weighing platform		✓	✓	✓	✓
	RS232C interface	✓	✓	✓	✓
	Slot for second interface (optional)	✓	✓	✓	✓
	Feedthroughs for below-the-balance weighing	✓	✓	✓	✓
	Feedthroughs for antitheft device	✓	✓	✓	✓
AC adapter		✓	✓	✓	✓
Country-specific power cable		✓	✓	✓	✓
Terminal		✓	✓	✓	✓
Protective cover for terminal		✓	–	–	–
Protective cover for weighing platform		–	–	✓	✓
Terminal support		–	–	–	–
"Magic Cube" draft shield with an additional draft shield door		✓	✓	–	–

Components		S platform			
Bottom plate		✓	✓	–	–
Weighing pan support		–	–	–	✓
SmartPan with drip tray		✓	✓	✓	–
Weighing pan	127 × 127 mm	✓	–	–	–
	172 × 205 mm	–	–	✓	–
	190 × 223 mm	–	–	–	✓
Operating instructions or Quick Guide; printed or on CD-ROM, depending on country of use		✓	✓	✓	✓
Production certificate		✓	✓	✓	✓
CE declaration of conformity		✓	✓	✓	✓

Components		L platform	
		0.1 g	**1 g**
Weighing platform		✓	✓
	RS232C interface	✓	✓
	Slot for second interface (optional)	✓	✓
	Feedthroughs for below-the-balance weighing	✓	–
	Ready for below-the-balance weighing (hook optional)	–	✓
	Feedthroughs for antitheft device	✓	✓
AC adapter		✓	–
Country-specific power cable		✓	✓
Terminal		✓	✓
Protective cover for terminal		✓	✓
Protective cover for weighing platform		–	–
Terminal support		✓	✓
Weighing pan	280 × 360 mm	✓	✓
Operating instructions or Quick Guide; printed or on CD-ROM, depending on country of use		✓	✓
Production certificate		✓	✓
CE declaration of conformity		✓	✓

4.3 Location

An optimal location will ensure accurate and reliable operation of the balance. The surface must be able to safely take the weight of the balance when fully loaded. The following local conditions must be observed:

Note
If the balance is not horizontal at the outset, it must be leveled during commissioning.

- The balance must only be used indoors and up to a maximum altitude of 4,000 m above sea level.
- Before switching on the balance, wait until all parts are at room temperature (+5 to 40 °C).
  The humidity must be between 10% and 80% non-condensing.
- The power plug must be accessible at all times.
- Firm, horizontal and vibration-free location.
- Avoid direct sunlight.
- No excessive temperature fluctuations.
- No strong drafts.

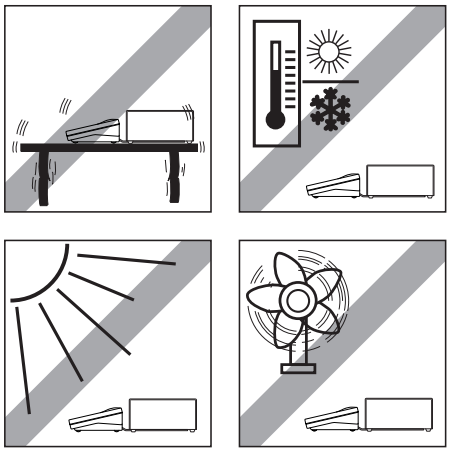

4.4 Assembling the balance

4.4.1 Installing the "Magic Cube" draft shield and weighing pan to the S weighing platform

Balances with readability of 1 mg, S platform with draft shield and SmartPan

1 Place the following components on the balance in the specified order:

2 Place draft shield (1) with closed cover, and then open.

Attention
The U-shaped draft shield glass is not permanently connected to the draft shield housing.

1 Always close the cover before picking up the draft shield.

2 Hold the entire draft shield by the housing at the back.

3 Always hold the draft shield with both hands and keep in a horizontal position.

- Bottom plate (2).
- SmartPan (3).
- Weighing pan (4) (optional).

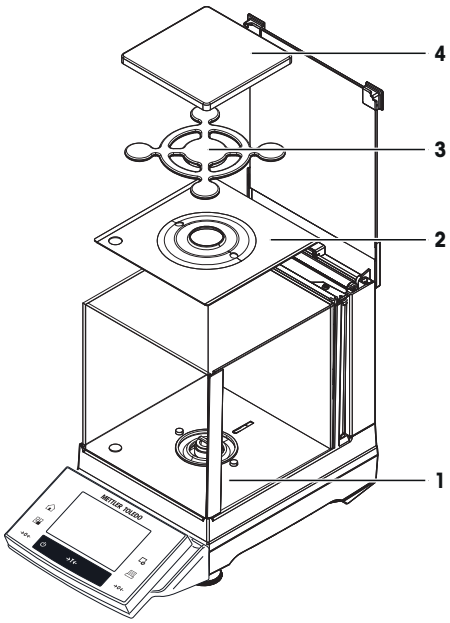

Balances with readability of 1 mg with SmartPan

- Place the following components on the balance in the specified order:

- Drip tray (1)
- SmartPan (2)

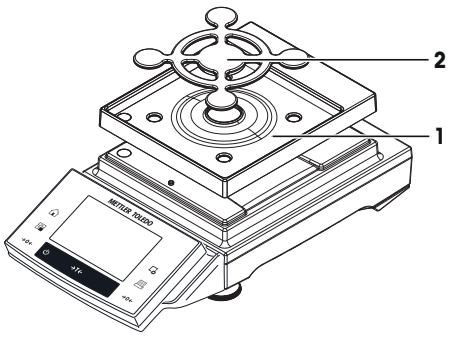

Balances with readability of 10 mg, S platform with SmartPan

- Place the following components on the balance in the specified order:
- Drip tray (1).
- SmartPan (2).
- Standard weighing pan (3) (optional).

Note
For the minimization of the air drafts, faster stabilization time and improved reproducibility, work without the standard weighing pan.

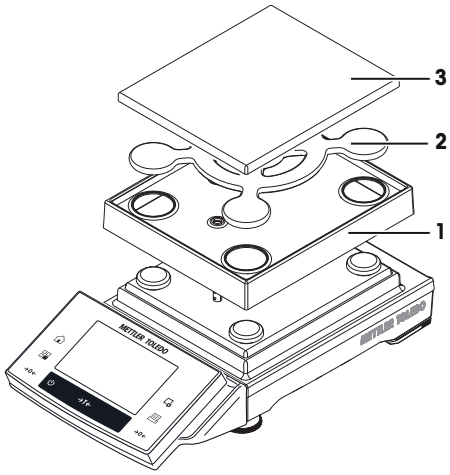

Balances with readability of 0.1 g, S platform

- Place the following components on the balance in the specified order:
- Weighing pan support (1).
- Weighing pan (2).

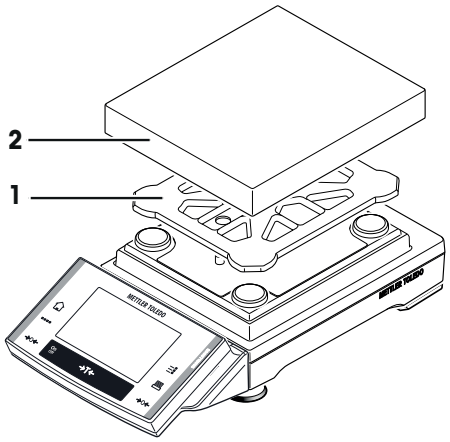

4.4.2 Placing the terminal on the L weighing platform

The terminal can be attached to the long or short side of the balance.

1 Mount the weighing pan.

2 Carefully turn the weighing platform over onto the weighing pan.

Attaching the terminal to the long side

1 Dismantle the cover (1) by removing the 2 screws (2).

2 Attach the terminal to the terminal support (5) as shown, using the screws (2) from the cover that was removed.

3 Insert the terminal cable (3) into the cable channel, as shown.

4 Screw the connector of the terminal cable into the socket (4).

5 Turn the balance back over into position.

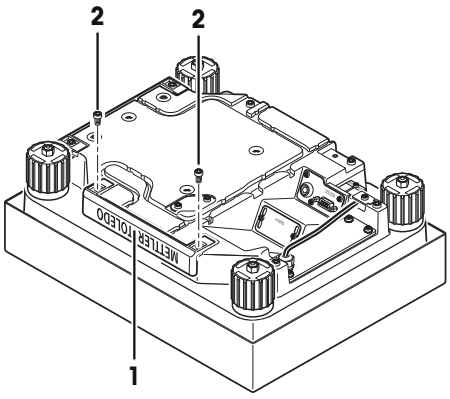

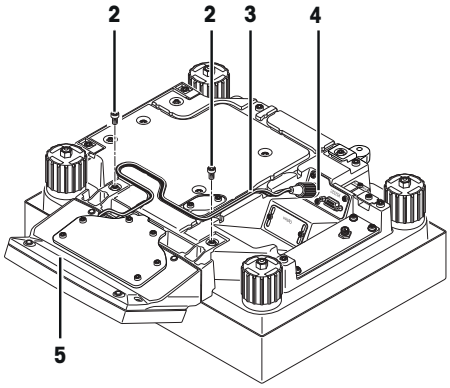

Attaching the terminal to the short side

1 Dismantle the cover (1) by removing the 2 screws (2).

2 Attach the terminal with terminal support to the points of attachment (6) with the screws (2).

3 Insert the terminal cable (3) into the cable channel, as shown.

4 Screw the connector of the terminal cable into the socket (4).

5 Turn the balance back over into position.

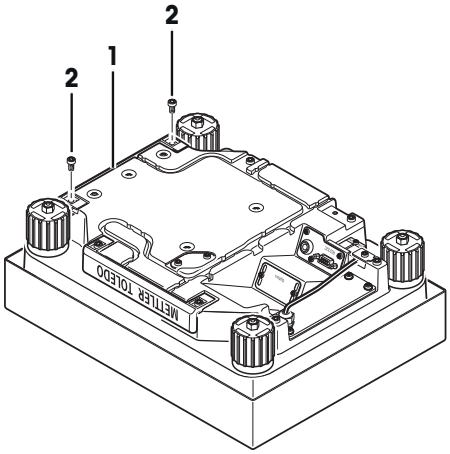

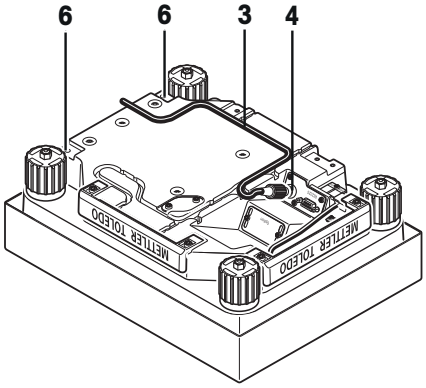

4.4.3 Setting options with the draft shield glass (1 mg Models)

The U-shaped draft shield glass (1) supports different setting options. The draft shield housing contains an additional draft shield pane (2), which can be used as required.

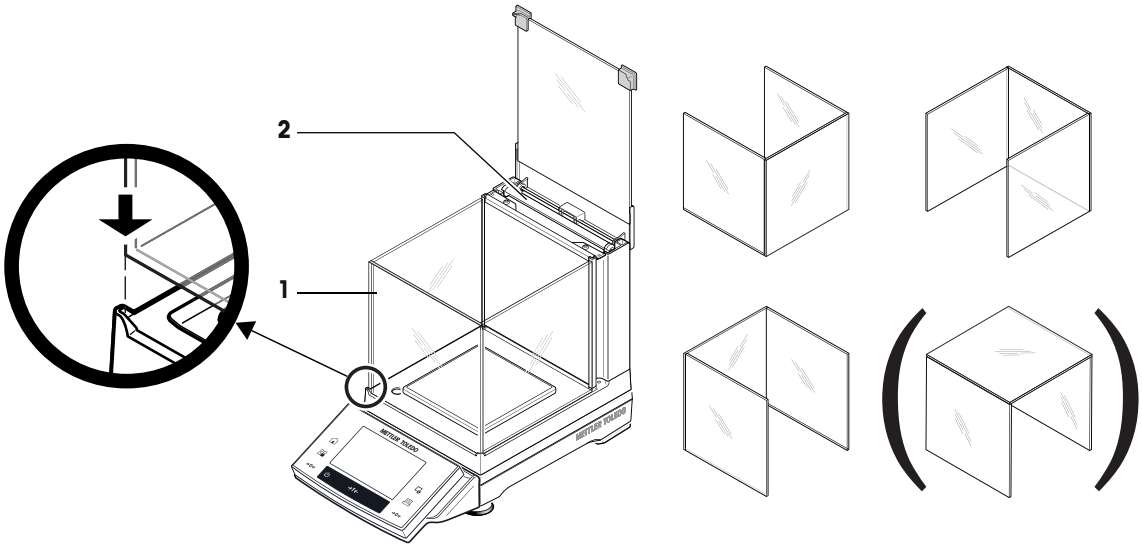

4.4.4 Using the additional draft shield door (1 mg Models)

1 Open the draft shield cover.

2 Pull the draft shield door (1) upwards out of the rear panel.

3 Insert the draft shield door into the housing from the side (left or right).

4 First position the draft shield door at the bottom (2) and then swivel it upwards (3) until you **feel it snap into place, see** diagram.
Attention
Check that the draft shield door is inserted correctly. The door must close easily. When transporting the balance, except for the terminal, also hold the draft shield, as this is fitted and not permanently connected to the weighing platform.

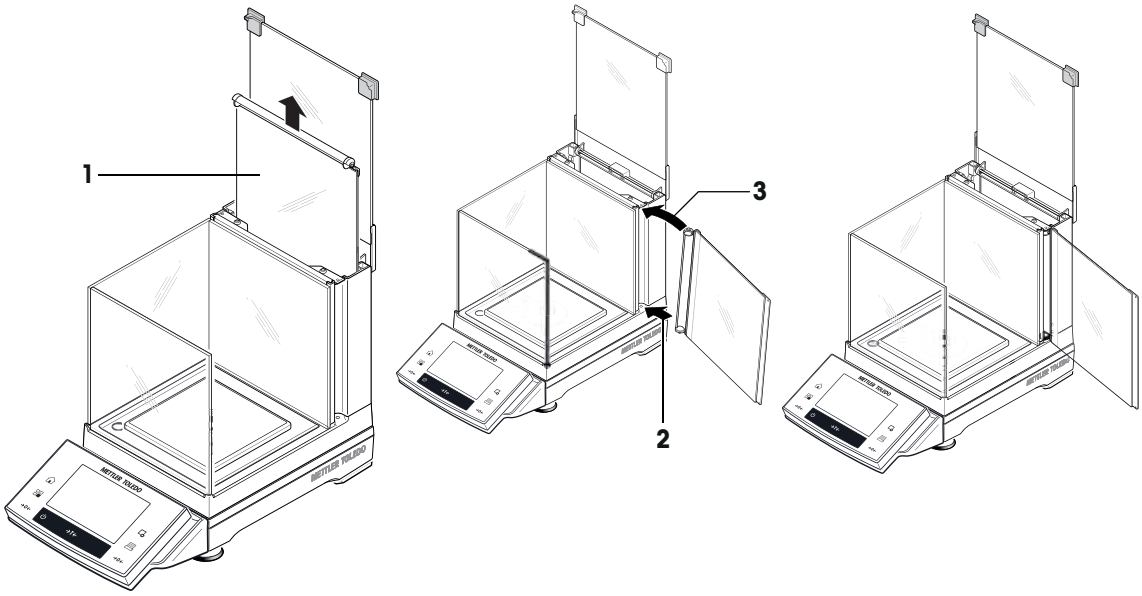

4.5 Connecting the balance

⚠ WARNING

Risk of electric shock

a) To connect the balance, only use the supplied three-core power cable with equipment grounding conductor.

b) Only connect the balance to a three-pin power socket with earthing contact.

c) Only standardized extension cable with equipment grounding conductor must be used for operation of the balance.

d) Intentional disconnection of the equipment grounding conductor is forbidden.

S weighing platform

The balance is supplied with an AC adapter and country-specific power cable. The AC adapter is suitable for use with the following voltage range:

100 – 240 V AC, 50/60 Hz.

Attention

- Check whether your local power supply falls within this range. If this is not the case, under no circumstances connect the AC adapter to the power supply, but contact a METTLER TOLEDO representative.
- The power plug must be accessible at all times.
- Prior to use, check the power cable for damage.
- Route the cable in such a way that it cannot be damaged or cause a hindrance when working.
- Ensure that no liquid comes into contact with the AC adapter.

Connecting S weighing platform

▪ Balance and terminal are at the final location.

1 Connect the AC adapter (1) to the connection socket (2) at the rear of the balance.

2 Connect the AC adapter (1) to the power supply.

⇨ The balance performs a self-test after connection to the power supply and is then ready to use.

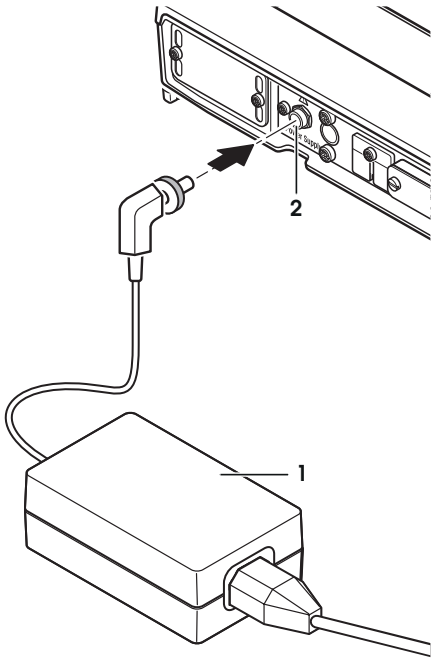

L weighing platform

- The balance is supplied with a country-specific power cable.
- Check whether your local power supply falls within this range. If this is not the case, under no circumstances connect the balance to the power supply, but contact a METTLER TOLEDO representative.
- The power plug must be accessible at all times.

- Prior to use, check the power cable for damage.
- Route the cable in such a way that it cannot be damaged or cause a hindrance when working.
- Ensure that the connectors can never come into contact with liquids.

Connecting L weighing platform

▪ Balance and terminal are at the final location.

- Connect the balance to the power supply.

⇨ The balance performs a self-test after connection to the power supply and is then ready to use.

4.6 Setting up the balance

4.6.1 Weighing for the first time

After commissioning the new balance, the first weighing can be carried out. This will also familiarize you with the operation of the balance.

4.6.1.1 Switching on the balance

▪ Balance is connected to the power supply.

▪ Terminal and balance are interconnected.

- To switch on, press [⏻].
  ⇨ Display appears.

⇨ Balance is ready to use.

4.6.1.2 Leveling the balance

Balances with readability of 1 mg, S platform and L platform

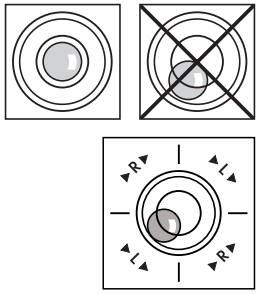

1 Align the balance horizontally.

2 Turning the leveling screws of the housing until the air bubble is in the inner circle of the level indicator.
   ⇨ The position of the air bubble illustrates which leveling screw you need to turn (L = left leveling screw, R = right leveling screw) and in which direction so that the air bubble moves to the center.

Example
In this example, turn the left leveling screw counterclockwise.

Balances with safety feet

1 Remove the clamps (1) for the safety feet by turning them outwards.
Attention
Turn the clamps (1) outwards as far as they will go (~ 90°), so that the safety feet can move freely.

2 Now level the balance by turning both leveling screws (2) as shown above until the air bubble is in the inner circle of the level indicator.

3 Secure the safety feet by turning the clamps (1) inwards as far as they will go.

Note
The balance must be leveled and adjusted each time it is moved to a new location.

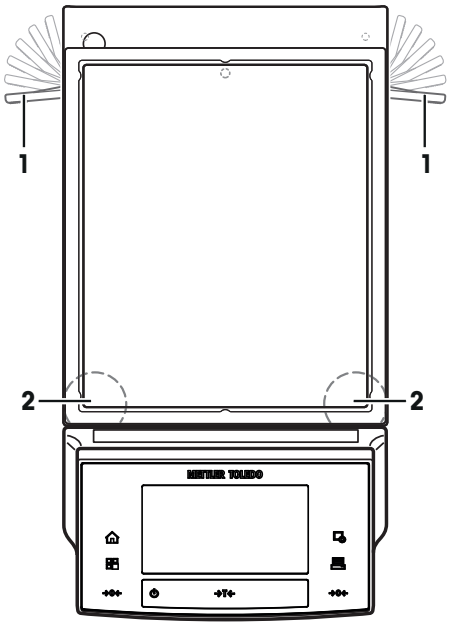

4.6.1.3 Performing a simple weighing

To perform a simple weighing, only the keys in the lower part of the terminal are required. The balance has separate keys for zeroing [→0←] and taring [→T←].

Zeroing

- Press [→0←].
⇨ Zeroing

After zeroing, all weights also the tare weight apply to this new zero point and the following apply: tare weight = 0, net weight = gross weight = 0.

Taring

Note
A negative weight is not permitted. An error message is generated. When the stability detector icon extinguishes (small ring left of the weight display), the indication is stable. The weight is displayed.

- If a weighing container is used, the balance must first be set to zero.

1 Place the container on the balance.

2 Press [→T←].
⇨ The balance is tared.

⇨ The weight of the container is set as the new tare weight and the previous tare (if available) is overwritten.

⇨ The **Net** display signals that all indicated weights are net weights.

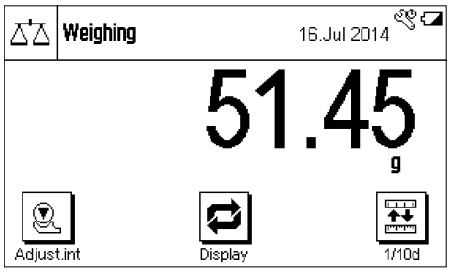

Congratulations!

The first weighing is now complete. The following sections contain further information about the extensive functions and applications of this balance.

4.7 Transporting the balance

Observe the following instructions to transport your balance to a new location.

Switching off the balance

1 Press and hold [⏻] until **Off** appears in the display.

2 Disconnect the balance from the power supply.

3 Disconnect all interface cables.

Attention
Alway carry the body of the balance. Do not hold the balance by the stand.

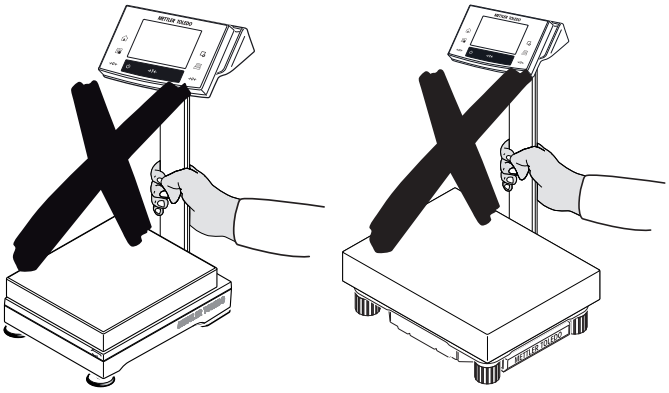

4.7.1 Transport over short distances

If you wish to move your balance over a short distance to a new location, proceed as follows.

S weighing platform

⚠ CAUTION

Damage of device

Never lift the balance by the glass draft shield or terminal stand, as this can cause damage! The draft shield or terminal stand is not fastened to the balance.

Never lift the balance by the terminal stand, as this can cause damage! The terminal stand is not fastened to the balance.

If the terminal is not permanently connected to the weighing platform, the balance must therefore be carried horizontally.

1 Hold the weighing platform with both hands and lift horizontally.

2 Carry the balance horizontally to the new location.

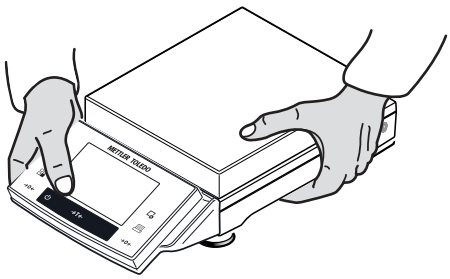

L weighing platform

⚠ CAUTION

Damage of Device

Never lift the balance by the terminal stand, as this can cause damage! The terminal stand is not fastened to the balance.

If the terminal is not permanently connected to the weighing platform, the balance must therefore be carried horizontally.

1 Hold the weighing platform with both hands and lift horizontally.

2 Carry the balance horizontally to the new location.

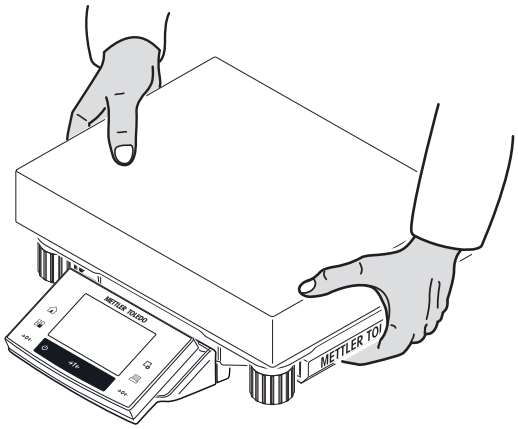

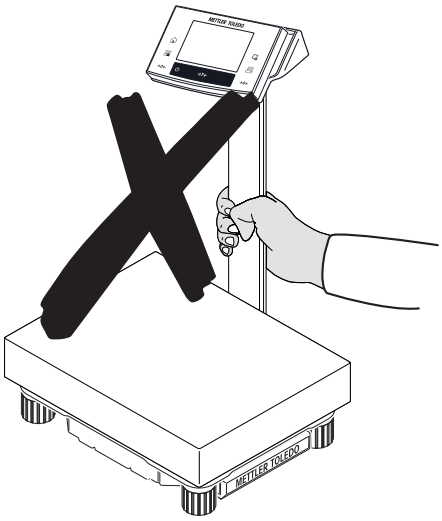

4.7.2 Transport over long distances

The complete original packaging must be used for transportation or shipment of the balance over long distances or if it cannot be ensured that the balance will be transported upright.

4.8 Below-the-balance weighing

Your balance is equipped with a hanger for carrying out weighings below the work surface (weighing below the balance).

Switching off the balance

1 Press and hold [⏻] until **Off** appears in the display.

2 Disconnect the balance from the power supply.

3 Disconnect all interface cables.

S weighing platform

1 **Attention**
Models with a glass draft shield:
Carefully lift the draft shield from the weighing platform and put it aside.

2 Remove the weighing pan (model dependent).

3 Remove the draft shield element (0.1 mg models).

4 Remove the weighing pan and pan support (model dependent).

5 Remove the SmartPan and drip tray (model dependent).

6 Lift the terminal from the terminal support (optional).

7 Place the terminal to the side of the weighing platform.

8 Remove the terminal support (optional).

9 Tilt the weighing platform backwards until the cover plate (2) is visible.
Attention
Do not place the weighing platform on the location bolt for the pan support (0.1 mg and 1 mg models).

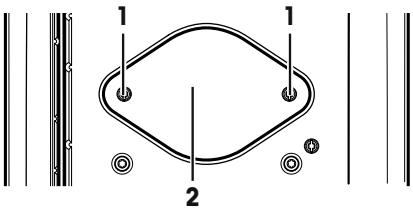

10 Remove the 2 screws (1) and the cover plate (2).
⇨ The hanger is now accessible.

11 Fasten the hooks (option) with screws.

12 Return the balance to its normal position and simply reinstall all components in the reverse order.

L weighing platform

Note
For below-the-balance weighing you will need hook 11132565 from the accessories range. Thread size M4.

1 Carefully turn the weighing platform over onto the weighing pan.

2 Remove the 2 screws (1) and the cover plate (2).
⇨ The hanger is now accessible.

3 Fasten the hooks (optional) with screws.

4 Return the balance to its normal position and simply reinstall all components in the reverse order.

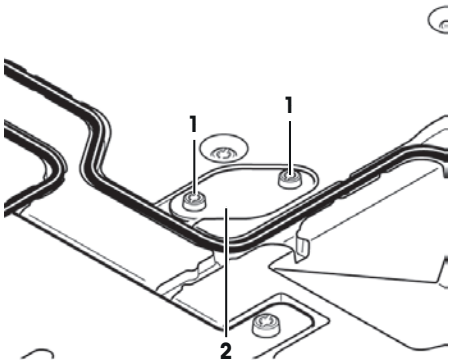

5 System Settings

Navigation: [⊞] > [**System**]

This section describes the procedure for adapting the balance to suit specific requirements. The system settings apply to the entire weighing system and therefore to all applications.

- The system settings can be displayed by pressing [⊞] and subsequently the [**System**] button.
  ⇨ The [**System**] window is displayed.

Printing all System settings

- ▪ A printer is connected and activated.
- If you are in the root of the **System** settings, press [🖶].

Note

- The detail of the protocol depends on the point at which printout is activated in the system settings. When [🖶] is pressed in the uppermost level of the system settings, all system settings are recorded. If printing is started in the [**Peripherals**] submenu for example, only the settings for the peripheral devices are recorded.
- The **Test/Adj. Weights**, **Test Sequences** and **Tasks** submenus in the [**Adjust/Test**] menu must be printed separately.

Example: Printout

```
System
Adjust/Test
FACT                  On
FACT
FACT
Temp.Criterion  2 Kelvin
Protocol Trigger      On
History
Adj. History
Adj. History Selection
Selection
Adjust.int             x
Adjust.ext             -
Temperature            x
Time Adjust.           x
Display Datasets Last 50
Protocol
Date/Time              x
Balance Type           x
SNR                    x
SW-Version             -
Balance ID             -
Weight ID              -
Certificate No.        -
```

```
Temperature            -
Nominal Weight         x
Actual Weight          x
Diff.                  x
Signature              x
Weighing parameters
Weighing Mode  Universal
Environment     Standard
Value Release       Fast
AutoZero              On
Language
Language         English
Peripherals
Printer   RS232 built-in
Host                 Off
LabX                 Off
LabX Controlled Device
                     Off
Secondary Display    Off
Bar Code             Off
Ext. Keyboard        Off
Terminal
Brightness           100
Contrast              50
```

```
Sound                 70
Touch Function        On
Date/Time
Date Format   D.MMM YYYY
Time Format        24:MM
Date/Time Display   Date
Access Rights
System     No Protection
Weighing parameters
           No Protection
Application
           No Protection
Application Setup
           No Protection
Access Rights
           No Protection
Standby
Standby              Off
Switch
Aux 1                Off
Aux 2                Off
Balance Info
Balance ID
Balance Info
```

System settings overview

	Designation	Explanation
	Adjust/Test	Settings for adjustment and test functions for verification of adjustments.
	Wghparam	Settings for adjusting the balance to specific weighing conditions.
	Language	Select dialog language.

	Peripherals	Configuration of interface for various peripheral devices.
	Option	Configuration of the optional interface.
	Terminal	Settings for the display (e.g. brightness) and for the behavior of the terminal.
	Date/Time	Entry of date and time and selection of required display formats.
	Rights	Assignment of access rights and passwords for weighing functions and menus.
	Standby	Settings for the standby mode.
	Switch	Settings for external momentary contact switches.
	Factory	Reset the factory settings.
	Info	Display/printing of balance information.

Menu structure

Main menu	Submenu	Further information
Adjust/Test	**Test/Adj. Weights**	**See** Settings for adjustments and tests [▸ 35]
	Test Sequences	**See** Test sequences [▸ 36]
	Tasks	**See** Tasks [▸ 45]
	FACT / Int. Adj.	**See** FACT/int. Adjustment [▸ 46]
	Test History	**See** Test history [▸ 48]
	Protocol	**See** Protocol – Definition of adjustment and test reports [▸ 49]
Wghparam	**Weighing Mode**	**See** Weighing parameters [▸ 49]
	Environment	
	Value Release	
	AutoZero	
Language	**Language**	**See** Language [▸ 51]
Peripherals	**Printer**	**See** Peripherals [▸ 51]
	Host	
	LabX	
	LabX Controlled Device	
	Secondary Display	
	Bar Code	
	Ext. Keyboard	
Option	**DHCP**	**See** Option [▸ 53]
	IP-Address	
	Subnet Mask	
	Standard Gateway	
	Domain Name Server	
	Hostname	

Terminal	**Brightness**	**See** Terminal [▸ 54]
	Contrast	
	Sound	
	Touch Function	
	Touchadjust	
Date/Time	**Date Format**	**See** Date/Time [▸ 55]
	Date	
	Time Format	
	Time	
	Date/Time	
Rights	**Password**	**See** Rights [▸ 56]
	System	
	Weighing parameters	
	Application	
	Application Setup	
	Access Rights	
Standby	**Standby**	**See** Standby [▸ 57]
Switch	**Aux 1**	**See** Switch [▸ 57]
	Aux 2	
Factory	**Factory**	**See** Factory [▸ 57]
Info	**Balance ID**	**See** Info [▸ 58]
	Info	

5.1 Adjustment/Test

Introduction for adjustment and tests

This section applies to the configuration of the balance for carrying out adjustments and tests.

- The balance is assembled and installed as stated in the operating instructions.
- The balance is leveled.

1 Connect the printer to printout settings or reports.

2 Activate the printer as an output device in the peripheral device settings.

Principles for carrying out adjustments and tests

Balances play a decisive role in research, development, quality assurance and production. Weighing errors cost time and money and non-compliance with legal requirements can be detrimental to health. Good Weighing Practice™ (GWP®) is the science based global weighing standard for the efficient life cycle management of weighing systems. The risk-based approach allows you to improve control of your whole measuring process, which in turn helps to avoid costly out of specification results. Our Feasible Cost Savings Optimized routine testing based on your risk management ensures consistently good quality in critical applications. Additionally, a sound testing scheme saves costs by eliminating unnecessary tests in lower risk processes.

Test Manager was specially developed, as part of our balance firmware, to simplify routine tests. In combination with **GWP® Verification,** efficient balance testing is ensured and specific audit requirements can be fulfilled more easily.

▶ www.mt.com/GWPVerification

Test Manager

Test Manager is a collection of security functions for the balance. These individually programmable functions help to maintain measuring accuracy via e.g. routine testing of the balance with external test weights. By providing active support with respect to test requests and predefined guided sequences will ensure that outstanding tests are not forgotten and complex tasks such as repeatability tests can be carried out easily.

Additional functions were developed to prevent measuring errors. These are, e.g. temperature sensors that can register possible temperature changes in the measuring cell and initiate adjustment by using internal weights which facilitate and maintain consistent accuracy.

The flexibility and customization of the test manager results in user guidance and appropriate messages, while performing specific operations, followed by complete records and documentation via printout or in conjunction with PC software.

The configuration process

In order to prepare the balance for a routine test and adjustment, a straightforward 3-stage process is required:

1 Register the test weights.
   ⇨ Information relating to all test weights is stored in a balance database.

2 Define the test sequence.
   ⇨ Describes the type of test (method) and the test weight and tolerance to be carried out.

3 Carry out the test sequence.

⇨ The task defines when and how the test sequence must be started and carried out.

Documentation and storage

To ensure the traceability of adjustments and tests, it is important to print the settings and periodically the results of the test history.

The results are stored in the test history up to a maximum of 120 entries. When this limit is reached, the oldest results are overwritten.

Each time the test sequence is changed, the version number is increased and displayed in the right top corner of the display. It is recommended to print and file each new version in a folder.

A complete list of individual settings can be printed by pressing the [🖶] key while the respective menu is open.

Settings for adjustments and tests

Navigation: [⊞] > [**System**] > [**Adjust/Test**]

This section describes all menu options and parameters relating to adjustment and testing of the balance.

For carrying out adjustments and tests, **see** Balance adjustment and testing [▸ 75].

The arrow buttons can be used to page forward or back to a menu page.

You can define the following parameters:

Menu item	Explanation	Further information
Test/Adj. Weights	Define the test weights and parameters for adjustment. Procedures for testing or adjustment.	**See** Test/Adjustment - weight settings [▸ 36]
Test Sequences	Defines the parameters of a test sequence for testing and behavior of the balance.	**See** Test sequences [▸ 36]
Tasks	Defines the task of a test sequence.	**See** Tasks [▸ 45]
FACT / Int. Adj.	Fully automatic internal balance adjustment.	**See** FACT/int. Adjustment [▸ 46]
Test History	Defines the settings for the test history.	**See** Test history [▸ 48]
Protocol	Defines the settings for the adjustment and test protocols.	**See** Protocol – Definition of adjustment and test reports [▸ 49]

5.1.1 Test/Adjustment - weight settings

Navigation: [⊞] > [**System**] > [**Adjust/Test**] > **Test/Adj. Weights**

This menu can be used to enter the designations or numbers of the certificate supplied with the respective test weight. This enables each external test weight to be clearly assigned to a specific certificate. Up to 12 external test weights can be configured. These test weights are used to carry out external tests and adjustments.

1 Tap [**Define**].
   ⇨ **Test/Adj. Weights** window is displayed.

2 Select an undefined weight or the name of the weight, the parameters of which are to be updated.

3 Tap [**Define**].

4 Change the settings and confirm with [**OK**].

⇨ The defined weights are available for selection in the test sequences.

Note
When the weight list is displayed, all parameters of the 12 test weights can be printed out with [🖶].

Test/Adj. Weight 1...Test/Adj. Weight12

You can define the following parameters:

Parameters	Explanation	Values
Name	Defines a name for a test weight (max. 20 characters).	Any (**Test/Adj. Weights**)*
Weight ID	Defines the identification (ID) of the weight (max. 20 characters).	Any
Class	Defines the class of the weight. **Note** **Own** can be selected if no other class can be used.	**E1*** | **E2** | **F1** | **F2** | **M1** | **M2** | **M3** | **ASTM1** | **ASTM2** | **ASTM3** | **ASTM4** | **ASTM5** | **ASTM6** | **ASTM7** | **Own**
Certificate No.	Defines the certificate number of the external test weight used (max. 20 characters).	Any
Weight Set No.	Defines the identification number of the set of weights if the test weight belongs to a set of weights (max. 20 characters).	Any
Actual Value	Weight from the weight certificate. Irrespective of the type of balance, the full value should be taken over without taking the decimal places of the balance into account (e.g. 20.00124 g). **Note** Methods use the actual value; this is rounded to the maximum decimal places of the balance and used for calculation.	Weight (**0 g**)*
Next Recalibration	Entry of the date of the next weight calibration. **Note** If no weight calibration is planned, the default value (31.12.2099) should be maintained .	**DD.MM.YYYY** (**31.12.2099**)*

* Factory setting

5.1.2 Test sequences

Navigation: [⊞] > [**System**] > [**Adjust/Test**] > **Test Sequences**

Test sequences define which test is carried out with which test weight. The user is guided through.

Note
The test should be carried out according to GWP® or another QM systems.

When **Test Sequences** is selected, a list of test sequences, the parameters of which can be adapted or overwritten, appears.

Up to 12 test sequences can be defined.

Note
In the test sequence you define among others the type of the test (= **Method**) and the weights to be used for this method. Before these weights can be selected, they have to be defined in [⊞] > [**System**] > [**Adjust/Test**] > **Test/Adj. Weights**.

- The test weights are defined.

1 Tap [**Define**].
   ⇨ **Test Sequences** window appears.

2 Select an undefined or existing test sequence, for example **Test Sequence 1** to be configured or adapted.

3 Tap [**Define**].
   ⇨ **Test Sequence** window appears.

4 Enter the designations and parameters and confirm with [**OK**].
   ⇨ The test sequence is stored in the **Test Sequence** menu.
   ⇨ Each time a test sequence is stored, the version number is increased by 1. The version number is shown at the top right of the display.

The arrow buttons can be used to page forward or back to a menu page.

Note
When the test sequence list is displayed, all parameters of the 12 test sequences can be printed with [🖶].

Configuration of test sequence parameters

Navigation: [⊞] > [**System**] > [**Adjust/Test**] > **Test Sequences** > **Test Sequence 1**

You can define the following parameters:

Parameters	Explanation	Values
Name	Defines a designation for a test sequence (max. 20 characters). **Note** Choose a comprehensible name to enable clear identification and easy traceability.	Any (**Test Sequence 1**)*
Preparation Instructions	Selection of preparatory instructions. **None** = no preparatory instructions are displayed in the test sequence. This is normally used for test sequences requiring no user actions, e.g. test sequences with the **SERVICE** method. **Standard** = the following preparatory instructions are displayed. These correspond to the typical SOP standard. 1 Clean the weighing pan. 2 Level the balance. 3 Switch on the printer. 4 Have the test weights ready. 5 Have the weight tweezers/fork ready.	**None*** | **Standard**

Method	Describes the type of test to be carried out and defines the main purpose of a test sequence. The test weights and respective tolerances to be used must be defined as part of the method.	**None** | **EC** | **RP1** | **RPT1** | **SE1** | **SE2** | **SERVICE** | **SET1** | **SET2**
Action if Failure	Defines how the balance should react if the test fails or is aborted.	**None** | **Warning** | **Attempt**
Instructions if Failure	Defines the instructions. This setting is independent of the parameters **Action if Failure** and is displayed each time a test sequence fails. **None** = the test sequence **Name** has failed. **Standard** = the test sequence **Name** has failed. The balance is outside the defined tolerances. Contact a responsible person within your company or METTLER TOLEDO service.	**None*** | **Standard**
Code to Unblock	System release. **Note** If **Action if Failure None** is selected, a failed test sequence will **never** block the balance.	Any (**Z**)*
Entry in GWP History	Defines whether the test result is stored in the GWP history. **Yes** = result of test sequence is stored. **No** = result of test sequence is not stored. **Note** If 120 entries are exceeded, the oldest result is overwritten with the newest result.	**Yes** | **No***

* Factory setting

For more details about **Method see** Method [▸ 38], and **Action if Failure see** Action if failure [▸ 44]

5.1.2.1 Method

Navigation: [⊞] > [**System**] > [**Adjust/Test**] > **Test Sequences** > **Test Sequence 1** > **Method**

A method describes the type of test to be carried out and defines the main purpose of a test sequence. The test weights and respective tolerances to be used must be defined as part of the method. There are 8 different methods available.

You can define the following parameters:

Menu item	Explanation	Further information
None	No method has been selected.	
EC	Method for eccentric load test.	**See** EC - eccentric load test [▸ 39]
RP1	Method for repeatability test.	**See** RP1 - repeatability test [▸ 39]
RPT1	Method for repeatability test with tare weight.	**See** RPT1 - repeatability test with tare weight [▸ 40]
SE1	Method for sensitivity test with one test weight.	**See** SE1 - sensitivity test with one weight [▸ 42]
SE2	Method for sensitivity test with two test weights.	**See** SE2 - sensitivity test with two weights [▸ 42]
SERVICE	Service method.	**See** SERVICE - reminder [▸ 42]
SET1	Method for sensitivity test with tare weight and one test weight.	**See** SET1 - sensitivity test with tare and one test weight [▸ 43]

SET2	Method for sensitivity test with tare weight and two test weights.	**See** SET2 - sensitivity test with tare and two test weights [▸ 43]

5.1.2.1.1 EC - eccentric load test

Navigation: [⊞] > [**System**] > [**Adjust/Test**] > **Test Sequences** > **Test Sequence 1** > **Method** > [**EC**]

The purpose of the **EC** method (eccentric load test) is to ensure that every eccentric load deviation is within the necessary user SOP tolerances.

The method uses two test tolerances (method tolerances), **s T1** and **s T2,** which are applied to the test sequence result. They work exactly the same as the weight tolerances **T1** and **T2**.

Test Weight

Navigation: [⊞] > [**System**] > [**Adjust/Test**] > **Test Sequences** > **Test Sequence 1** > **Method** > [**EC**] > **Test Weight**

You can define the following parameters:

Parameters	Explanation	Values
Test/Adj. Weight	Selects the predefined test weight. **Test/Adj. Weight 1** … **Test/Adj. Weight12** = defined in **Test/Adj. Weights** menu item.	**Test/Adj. Weight 1** | **Test/Adj. Weight 2** | … | **Test/Adj. Weight12**
Tolerances	It is recommended to set the test weight tolerances to 100%. Because for this kind of test the test tolerance is relevant.	**Tolerance T1** | **Name T1** | **Tolerance T2** | **Name T2**

Tolerances for eccentric load deviation

Navigation: [⊞] > [**System**] > [**Adjust/Test**] > **Test Sequences** > **Test Sequence 1** > **Method** > [**EC**] > **Test Weight** > **Tolerance for Eccentricity Dev.**

You can define the following parameters:

Parameters	Explanation	Values
Tolerance EC T1	Defines the tolerance EC T1 for the eccentric load deviation. If the result tolerance (method tolerance) EC T1 is exceeded, the eccentric load test is passed with a warning.	Any (0.10 g)*
Name EC T1	Defines a designation for EC T1 (max. 20 characters).	Any (**Warn Limit**)*
Tolerance EC T2	Defines the tolerance EC T2 for the eccentric load deviation. If the result tolerance (method tolerance) T2 is exceeded, the eccentric load test fails.	Any (0.10 g)*
Name EC T2	Defines a designation for EC T2 (max. 20 characters).	Any (**Control Limit**)*

* Factory setting

5.1.2.1.2 RP1 - repeatability test

Navigation: [⊞] > [**System**] > [**Adjust/Test**] > **Test Sequences** > **Test Sequence 1** > **Method** > [**RP1**]

The **RP1** method calculates the mean and standard deviation (Symbol s) of a series of measurements with a single test weight in order to determine the repeatability of the balance.

The method uses two result tolerances (method tolerances), **s T1** and **s T2,** which are applied to the test sequence result. They function similar to **T1** and **T2**.

Test Weight

Navigation: [⊞] > [**System**] > [**Adjust/Test**] > **Test Sequences** > **Test Sequence 1** > **Method** > [**RP1**] > **Test Weight** > **Test/Adj. Weight**

You can define the following parameters:

Parameters	Explanation	Values
Test/Adj. Weight	Selects the predefined test weight. **Test/Adj. Weight 1** … **Test/Adj. Weight12** = defined in **Test/Adj. Weights** menu item.	**Test/Adj. Weight 1** | **Test/Adj. Weight 2** | … | **Test/Adj. Weight12**
Tolerances	It is recommended to set the test weight tolerances to 100%. Because for this kind of test the test tolerance is relevant.	**Tolerance T1** | **Name T1** | **Tolerance T2** | **Name T2**

Tolerances (s) for repeatability test

Navigation: [⊞] > [**System**] > [**Adjust/Test**] > **Test Sequences** > **Test Sequence 1** > **Method** > [**RP1**] > **Test Weight** > **Tolerances (s)**

You can define the following parameters:

Parameters	Explanation	Values
Tolerance s T1	Defines the tolerance s T1 for the repeatability test. If the tolerance s T1 is exceeded, the repeatability test is passed with a warning.	Any (0.000 g)*
Name s T1	Defines a designation for s T1 (max. 20 characters).	Any (**Warn Limit**)*
Tolerance s T2	Define the tolerance s T2 for the repeatability test. If the tolerance s T2 is exceeded, the repeatability test fails.	Any (0.000 g)*
Name s T2	Defines a designation for s T2 (max. 20 characters).	Any (**Control Limit**)*

* Factory setting

Number of Repetitions

Navigation: [⊞] > [**System**] > [**Adjust/Test**] > **Test Sequences** > **Test Sequence 1** > **Method** > [**RP1**] > **Test Weight** > **Number of Repetitions**

You can define the following parameters:

Parameters	Explanation	Values
Number of Repetitions	Defines the number of weight measurements of a series.	2 … 15 (10)*

* Factory setting

5.1.2.1.3 RPT1 - repeatability test with tare weight

Navigation: [⊞] > [**System**] > [**Adjust/Test**] > **Test Sequences** > **Test Sequence 1** > **Method** > [**RPT1**]

The **RPT1** method calculates the mean and standard deviation (Symbol s) of a series of measurements with two test weights in order to determine the repeatability. In contrast to the **RP1** method, a second test weight is used to simulate the use of a tare container.

The method uses two test tolerances (method tolerances), **s T1** and **s T2,** which are applied to the test sequence result. They work exactly the same as the weight tolerances **T1** and **T2**.

Tare Weight

Navigation: [⊞] > [**System**] > [**Adjust/Test**] > **Test Sequences** > **Test Sequence 1** > **Method** > [**RPT1**] > **Tare Weight** > **Test/Adj. Weight**

You can define the following parameters:

Parameters	Explanation	Values
Tare Weight	Selects the predefined test weight corresponding to the tare container weight. **Test/Adj. Weight 1** … **Test/Adj. Weight12** = defined in **Test/Adj. Weights** menu item.	**Test/Adj. Weight 1** | **Test/Adj. Weight 2** |… | **Test/Adj. Weight12**
Tolerances	It is recommended to set the tare weight tolerances to 100%.	**Tolerance T1** | **Name T1** | **Tolerance T2** | **Name T2**

Test Weight

Navigation: [⊞] > [**System**] > [**Adjust/Test**] > **Test Sequences** > **Test Sequence 1** > **Method** > [**RPT1**] > **Test Weight** > **Test/Adj. Weight**

You can define the following parameters:

Parameters	Explanation	Values
Test/Adj. Weight	Selects the predefined test weight. **Test/Adj. Weight 1** … **Test/Adj. Weight12** = defined in **Test/Adj. Weights** menu item.	**Test/Adj. Weight 1** | **Test/Adj. Weight 2** | … | **Test/Adj. Weight12**
Tolerances	It is recommended to set the test weight tolerances to 100%. Because for this kind of test the test tolerance is relevant.	**Tolerance T1** | **Name T1** | **Tolerance T2** | **Name T2**

Tolerances (s) for repeatability test

Navigation: [⊞] > [**System**] > [**Adjust/Test**] > **Test Sequences** > **Test Sequence 1** > **Method** > [**RPT1**] > **Test Weight** > **Tolerances (s)**

You can define the following parameters:

Parameters	Explanation	Values
Tolerance s T1	Defines the tolerance s T1 for the repeatability test. If the tolerance s T1 is exceeded, the repeatability test is passed with a warning.	Any (0.000 g)*
Name s T1	Defines a designation for s T1 (max. 20 characters).	Any (**Warn Limit**)*
Tolerance s T2	Define the tolerance s T2 for the repeatability test. If the tolerance s T2 is exceeded, the repeatability test fails.	Any (0.000 g)*
Name s T2	Defines a designation for s T2 (max. 20 characters).	Any (**Control Limit**)*

* Factory setting

Number of Repetitions

Navigation: [⊞] > [**System**] > [**Adjust/Test**] > **Test Sequences** > **Test Sequence 1** > **Method** > [**RPT1**] > **Test Weight** > **Number of Repetitions**

You can define the following parameters:

Parameters	Explanation	Values
Number of Repetitions	Defines the number of weight measurements of a series.	2 … 15 (10)*

* Factory setting

5.1.2.1.4 SE1 - sensitivity test with one weight

Navigation: [⊞] > [**System**] > [**Adjust/Test**] > **Test Sequences** > **Test Sequence 1** > **Method** > [**SE1**]

The **SE1** method tests the sensitivity of the balance with one test weight.

Test Weight

Navigation: [⊞] > [**System**] > [**Adjust/Test**] > **Test Sequences** > **Test Sequence 1** > **Method** > [**SE1**] > **Test Weight** > **Test/Adj. Weight**

You can define the following parameters:

Parameters	Explanation	Values
Test/Adj. Weight	Selects the predefined test weight. **Test/Adj. Weight 1** … **Test/Adj. Weight12** = defined in **Test/Adj. Weights** menu item.	**Test/Adj. Weight 1** | **Test/Adj. Weight 2** | … | **Test/Adj. Weight12**
Tolerances	The test tolerances are used for the sensitivity test.	**Tolerance T1** | **Name T1** | **Tolerance T2** | **Name T2**

5.1.2.1.5 SE2 - sensitivity test with two weights

Navigation: [⊞] > [**System**] > [**Adjust/Test**] > **Test Sequences** > **Test Sequence 1** > **Method** > [**SE2**]

The **SE2** method tests the sensitivity of the balance with two test weights.

Test Weight 1 and Test Weight 2

Navigation: [⊞] > [**System**] > [**Adjust/Test**] > **Test Sequences** > **Test Sequence 1** > **Method** > [**SE2**] > **Test Weight 1** or **Test Weight 2** > **Test/Adj. Weight**

You can define the following parameters:

Parameters	Explanation	Values
Test/Adj. Weight	Selects the predefined test weight. **Test/Adj. Weight 1** … **Test/Adj. Weight12** = defined in **Test/Adj. Weights** menu item.	**Test/Adj. Weight 1** | **Test/Adj. Weight 2** | … | **Test/Adj. Weight12**
Tolerances	The test tolerances are used for the sensitivity test.	**Tolerance T1** | **Name T1** | **Tolerance T2** | **Name T2**

5.1.2.1.6 SERVICE - reminder

Navigation: [⊞] > [**System**] > [**Adjust/Test**] > **Test Sequences** > **Test Sequence 1** > **Method** > [**SERVICE**]

The **SERVICE** method is more a reminder than a method. It is normally set to perform regular checks of various data (dates) in the background. It is used e.g. as a reminder for the next service date or MinWeigh date. The date is checked on a regular basis and a message appears when the defined task is due. The **SERVICE** method can also be used as early pre-warning.

The **SERVICE** method can also only be used for the display of **Preparation Instructions**. For example, the user is requested to level the balance on a daily basis. In this special case, the **Preparation Instructions** must be set in the test sequence setting to **Standard**. Ensure that no elements are selected in the method status.

Note

To enable this test sequence to be ended without user actions, **Preparation Instructions** must be set in the test sequence to **None**.

You can define the following parameters:

Parameters	Explanation	Values
Status	Defines the reminder target. This is either an event (**Battery Change**, **Service**...) or a defined task. Values can be ☐ (deactivated) or ☑ (activated).	**Battery Change** | **Service** | **MinWeigh** | **Weight Cal.** | **Task 01** … **Task 12**
Early Warning Alert	Defines the pre-warning time. **Note** With one **SERVICE** reminder, several dates can be checked simultaneously. The same pre-warning time applies to all dates however. If different pre-warning times are necessary, several **SERVICE** methods must be defined.	1 … 365 days (7 days)*

* Factory setting

5.1.2.1.7 SET1 - sensitivity test with tare and one test weight

Navigation: [⊞] > [**System**] > [**Adjust/Test**] > **Test Sequences** > **Test Sequence 1** > **Method** > [**SET1**]

The **SET1** method tests the sensitivity of the balance with two test weights. The first test weight is used to simulate a tare container.

Tare Weight

Navigation: [⊞] > [**System**] > [**Adjust/Test**] > **Test Sequences** > **Test Sequence 1** > **Method** > [**SET1**] > **Tare Weight** > **Test/Adj. Weight**

You can define the following parameters:

Parameters	Explanation	Values
Tare Weight	Selects the predefined test weight corresponding to the tare container weight. **Test/Adj. Weight 1** … **Test/Adj. Weight12** = defined in **Test/Adj. Weights** menu item.	**Test/Adj. Weight 1** | **Test/Adj. Weight 2** |... | **Test/Adj. Weight12**
Tolerances	It is recommended to set the tare weight tolerances to 100%.	**Tolerance T1** | **Name T1** | **Tolerance T2** | **Name T2**

Test Weight

Navigation: [⊞] > [**System**] > [**Adjust/Test**] > **Test Sequences** > **Test Sequence 1** > **Method** > [**SET1**] > **Test Weight** > **Test/Adj. Weight**

You can define the following parameters:

Parameters	Explanation	Values
Test/Adj. Weight	Selects the predefined test weight. **Test/Adj. Weight 1** … **Test/Adj. Weight12** = defined in **Test/Adj. Weights** menu item.	**Test/Adj. Weight 1** | **Test/Adj. Weight 2** | ... | **Test/Adj. Weight12**
Tolerances	The test tolerances are used for the sensitivity test.	**Tolerance T1** | **Name T1** | **Tolerance T2** | **Name T2**

5.1.2.1.8 SET2 - sensitivity test with tare and two test weights

Navigation: [⊞] > [**System**] > [**Adjust/Test**] > **Test Sequences** > **Test Sequence 1** > **Method** > [**SET2**]

The **SET2** method tests the sensitivity of the balance with three test weights. The first test weight (tare weight) is used to simulate a tare container.

Test Weight 1 and Test Weight 2

Navigation: [⊞] > [**System**] > [**Adjust/Test**] > **Test Sequences** > **Test Sequence 1** > **Method** > [**SET2**] > **Test Weight 1** or **Test Weight 2** > **Test/Adj. Weight**

You can define the following parameters:

Parameters	Explanation	Values
Test/Adj. Weight	Selects the predefined test weight. **Test/Adj. Weight 1** … **Test/Adj. Weight12** = defined in **Test/Adj. Weights** menu item.	**Test/Adj. Weight 1** | **Test/Adj. Weight 2** | … | **Test/Adj. Weight12**
Tolerances	The test tolerances are used for the sensitivity test.	**Tolerance T1** | **Name T1** | **Tolerance T2** | **Name T2**

Tare Weight

Navigation: [⊞] > [**System**] > [**Adjust/Test**] > **Test Sequences** > **Test Sequence 1** > **Method** > [**SET2**] > **Tare Weight** > **Test/Adj. Weight**

You can define the following parameters:

Parameters	Explanation	Values
Tare Weight	Selects the predefined test weight corresponding to the tare container weight. **Test/Adj. Weight 1** … **Test/Adj. Weight12** = defined in **Test/Adj. Weights** menu item.	**Test/Adj. Weight 1** | **Test/Adj. Weight 2** |… | **Test/Adj. Weight12**
Tolerances	It is recommended to set the tare weight tolerances to 100%.	**Tolerance T1** | **Name T1** | **Tolerance T2** | **Name T2**

5.1.2.2 Action if failure

Defines how the balance should react if the test fails or is aborted. There are 3 types of behavior.

Warning

Navigation: [⊞] > [**System**] > [**Adjust/Test**] > **Test Sequences** > **Test Sequence 1** > **Action if Failure** > **Warning**

You can define the following parameters:

Parameters	Explanation	Values
Warning Message	Defines the warning dialog for the user. The user can work as normal, but receives repeated warnings that the test sequence has failed. The user is requested to restart the test sequence. **Standard** = the test sequence **Name** has failed. 1. To start the test sequence again, tap [**Start**]. **Advanced** = the test sequence **Name** has failed. Follow the steps below: 1. Check the weighing parameters. 2. To start the test sequence again, tap [**Start**]. **Note** If the [**Start**] button is grayed, the current user is not authorized to start the test sequence.	**Standard*** | **Advanced**
Time Interval	Defines the time (in hours) until the warning is displayed again.	1 … 1000 h (1 h)*

Max. Number Of Warnings	Defines the maximum permitted number of warnings for this test sequence. When the maximum number is reached and the test sequence was not successfully completed, the balance is blocked.	1 … 1000 (1)*
Action after Failure	Defines how a test sequence (already in warning mode) should behave if it fails again or is aborted during the method sequence. **None** = the test sequence is aborted and restarted after lapse of the next warning interval. **See Max. Number Of Warnings**. **1 Attempt**, **2 Attempts** or **3 Attempts** = in contrast to **None**, the balance does not return to the warning mode. The test sequence must be passed within the number of attempts defined here or the balance will be blocked. **Until Passed** = permits an unlimited number of attempts. The balance does not return to the warning mode. **Note** If **GWP History** is activated, only the last result and number of attempts are stored.	**None*** | **1 Attempt** | **2 Attempts** | **3 Attempts** | **Until Passed**

* Factory setting

Attempt

Navigation: [⊞] > [**System**] > [**Adjust/Test**] > **Test Sequences** > **Test Sequence 1** > **Action if Failure** > **Attempt**

Parameters	Explanation	Values
Attempt	Defines how often a test may be carried out until it is passed. **1**, **2** or **3** = the test must be passed within the defined number of attempts or the balance is blocked. In contrast to **Warning**, it is not possible to continue to work between attempts, but only when the test has been passed. **Until Passed** = permits an unlimited number of attempts. **Note** If **GWP History** is activated, only the last result and number of attempts are stored.	**1*** | **2** | **3** | **Until Passed**

* Factory setting

Note
On successful completion of the test sequence, no more warning dialogs are displayed. If a specific test sequence blocks the balance, the warning mode is cancelled on release so that no further warning messages are displayed.

5.1.3 Tasks

Navigation: [⊞] > [**System**] > [**Adjust/Test**] > **Tasks**

Tasks define when a test sequence must be carried out and how it is started.

Up to 12 tasks can be defined.

- The test sequence is defined in the **Test Sequence** menu.

1 Tap [**Define**].
   ⇨ The **Tasks** window appears.

2 Select the test sequence for the task.
   ⇨ The **Task State** window appears.
   ⇨ When a test sequence is assigned to a task, the name appears in the task list.

3 Tap [**On**] and subsequently the associated button.
   ⇨ **Task** window appears.

4 Define the settings and confirm with [**OK**].
   ⇨ The date for carrying out the next test sequence is recalculated.

⇨ The date for carrying out the next test is calculated at the end of each completed test sequence.

The arrow buttons can be used to page forward or back to a menu page.

Note
When the task list is displayed, all parameters of the 12 tasks can be printed with [▤].

Navigation: [⊞] > [**System**] > [**Adjust/Test**] > **Tasks** > **Task 01** … **Task 12**

The task can be activated or deactivated in the task status window. Deactivated tasks are ignored by the system. Activated tasks can be changed or supplemented.

You can define the following parameters:

Parameters	Explanation	Values
Task 01	Defines the task status. **On**: Assigns a test sequence to a task.	**Off*** | **On**

* Factory setting

5.1.3.1 Assigning a test sequence to a task

Navigation: [⊞] > [**System**] > [**Adjust/Test**] > **Tasks** > **Task 01** > [**On**]

When **Test Sequence** is selected, the user can assign a test sequence to a task from a list of already defined test sequences.

You can define the following parameters:

Parameters	Explanation	Values
Test Sequence	Selects a predefined test sequence. **Test Sequence 1** … **Test Sequence 12** = defined in **Test Sequences** menu item.	**Task 01** | **Task 02** | **Task 03** | **Task 04** | **Task 05** | **Task 06** | **Task 07** | **Task 08** | **Task 09** | **Task 10** | **Task 11** | **Task 12**
Starting Method	Defines the way how a test sequence is started. **Interval**: Define **Interval Start Time** : (08:00)* | **Interval** : (1 day)*.	**Manual** | **Interval** | **On Power On**
Defined Days	Defines the days on which the task can be performed. **Note** Test sequences with **Starting Method** > **Manual** or **Interval** appear in the test selection list only on the days defined here. If the day on which a test sequence is due is not defined, the test sequence is postponed until the next. Values can be ☐ (deactivated) or ☑ (activated)*.	**Monday*** | **Tuesday*** | **Wednesday*** | **Thursday*** | **Friday*** | **Saturday*** | **Sunday***

5.1.4 FACT/int. Adjustment

Navigation: [⊞] > [**System**] > [**Adjust/Test**] > **FACT / Int. Adj.**

FACT stands for Fully Automatic Calibration Technology and offers fully automatic internal balance adjustment with an internal weight, based on preselected time and/or temperature criteria.

FACT is switched on by default and can be switched off as required.

You can define the following parameters:

Parameters	Explanation	Values
FACT / Int. Adj.	Activates and defines the behavior of the FACT adjustment function.	**Off** | **On** | **CalInfo**
CalInfo	Activates the FACT temperature criterium. The adjustment must be start manually.	None

5.1.4.1 Definition of parameters for FACT_XS

Navigation: [⊞] > [**System**] > [**Adjust/Test**] > **FACT / Int. Adj.** > [**On**] > [**Define**]

Note

With approved balances (according to OIML accuracy class II), **FACT / Int. Adj.** cannot be switched off.

You can define the following parameters:

Parameters	Explanation	Values
Temp.Criterion	Defines the temperature difference, which initiates automatic adjustment.	**Off** | **0.5 Kelvin** | **1 Kelvin*** | **2 Kelvin** | **3 Kelvin** (* Model-dependent)
Protocol Trigger	Defines when a protocol is to be printed automatically. **On** = protocol is automatically printed when automatic adjustment is initiated. **Off** = no printing.	**On*** | **Off**
Advanced Options	This function can be used to extend FACT and internal adjustment procedures with internal tests.	**Off*** | **On**

* Factory setting

Advanced options

Navigation: [⊞] > [**System**] > [**Adjust/Test**] > **FACT / Int. Adj.** > [**On**] > [**Define**] > **Advanced Options**

Adjustment can be adapted to suit particular requirements by activating the advanced option function.

You can define the following parameters:

Parameters	Explanation	Values
As Found	Activates the input test. At the start of the adjustment sequence, an internal test (sensitivity) is performed to ascertain the actual status. The input test is automatically started when the adjustment sequence is activated and the result is displayed and recorded.	**No*** | **Yes**
LevelControl	Activates leveling. The level of the balance is checked. **Note** The user is requested to check the level of the balance.	**No*** | **Yes**
As Left	Activates the output test. When adjustment is complete, an internal test (sensitivity) is performed from anew.	**No*** | **Yes**
Tolerances	Defines the tolerances. Defines the tolerances applied during the input test and output test, **see** Method [▸ 38].	**Tolerance T1** | **Name T1** | **Tolerance T2** | **Name T2**

Blocking	Blocks the balance. Defines whether the balance is to be blocked after exceeding the tolerance T2 in the input test or output test or after aborting adjustment. If the balance is blocked, it cannot be used until it is released with the appropriate release code.	**No*** | **Yes**
Code to Unblock	Releases the balance. Defines the code required to release a balance that has been blocked due to an input test, adjustment or output test error.	Any (**Z**)*

* Factory setting

5.1.5 Test history

Navigation: [⊞] > [**System**] > [**Adjust/Test**] > **Test History**

The balance always records all adjustment data and the required results of performed tests and stores these in a special fail-safe memory. The options in the test history allow the selection of results for documentation or printing.

Note
When the memory is full (120 entries for the GWP history), the oldest entries are automatically deleted and overwritten by new entries. It is important to ensure that entries required for the documentation standards are printed and archived to ensure full traceability of the performed tests and adjustments.

Parameters	Explanation	Values
Test History	Selects history.	**Adj. History** | **Adj. History Selection** | **GWP History**

Adj. History

A window with a list of performed adjustments can be displayed by tapping [**Show**]. Although the balance permanently records all adjustments made, only those selected for display in **Adj. History Selection** are listed. Specific data is displayed for each adjustment: date and time, type of adjustment, temperature, leveling. The complete list can be printed with [🖶] .

Adj. History Selection

You can define the following parameters:

Parameters	Explanation	Values
Selection	Selects the results to be stored. Select the adjustments to be displayed in the adjustment history. The list can be selectively shortened (including printout) for improved clarity. **Note** The balance records all adjustment operations. The settings in this menu define the operations to be displayed in the list. Values can be ☐ (deactivated) or ☑ (activated)*.	**Adjust.int*** | **Adjust.ext** | **Temperature*** | **Time Adjust.***
Display Datasets	Defines the number of displayed datasets.	**Last 50*** | **Last 40** | **Last 30** | **Last 20** | **Last 10**

* Factory setting

GWP History

A window with a list of test sequence results can be displayed by tapping [**Show**]. The displayed entry can be printed with [🖶]. The GWP history can store maximum 120 entries. Only the results of test sequences are stored where the GWP history was set to [**Yes**].

5.1.6 Protocol – Definition of adjustment and test reports

Navigation: [⊞] > [**System**] > [**Adjust/Test**] > **Protocol**

Information to be printed in the adjustment and test reports can be defined in the settings.

The arrow buttons can be used to page forward or back to a menu page.

You can define the following parameters:

Parameters	Explanation	Values
Protocol	Defines the information to be printed in the protocol. Values can be ☐ (deactivated) or ☑ (activated)*. **SNR**: stands for serial number	**Date/Time*** | **Balance Type*** | **SNR*** | **SW-Version** | **Balance ID** | **Weight ID** | **Certificate No.** | **Temperature** | **Nominal Weight*** | **Actual Weight*** | **Diff.*** | **Signature***

* Factory setting

5.2 Weighing parameters

Navigation: [⊞] > [**System**] > [**Wghparam**]

This menu can be used to adapt the balance to suit specific requirements.

1 Tap [**Wghparam**] and subsequently the associated button.

2 Settings can be changed by tapping the associated button.

3 Change the settings and confirm with [**OK**].

Note

If access to this menu has been protected, the appropriate password must be entered.

You can define the following parameters:

Menu item	Explanation	Further information
Weighing Mode	Adapts the balance to the weighing mode.	**See** Weighing mode [▸ 49]
Environment	Adapts the balance to the ambient conditions and location.	**See** Ambient conditions [▸ 50]
Value Release	Defines how quickly a stable measured value is recognized by the balance as stable and released.	**See** Measured value release [▸ 50]
AutoZero	Activates/deactivates automatic zero correction.	**See** AutoZero [▸ 50]

5.2.1 Weighing mode

Navigation: [⊞] > [**System**] > [**Wghparam**] > **Weighing Mode**

This setting can be used to adapt the balance to the weighing mode.

You can define the following parameters:

Parameters	Explanation	Values
Weighing Mode	Defines the weighing mode.	**Universal*** | **Dosing** | **Sensor Mode** | **Checkweighing**

* Factory setting

Weighing mode settings

Note
The number of available settings depends on the type of balance.

Values	Explanation
Universal	For all standard weighing applications.
Dosing	For dosing liquid or powdery products. With this setting, the balance responds very quickly to the smallest changes in weight.
Sensor Mode	Depending on the setting of the ambient conditions, this setting delivers a filtered weighing signal of varying strength. The filter has a linear characteristic in relation to time (not adaptive) and is suitable for continuous measured value processing.
Checkweighing	With this setting, the balance only reacts to significant changes in weight and the result is very stable.

5.2.2 Ambient conditions

Navigation: [⊞] > [**System**] > [**Wghparam**] > **Environment**

With this setting, the balance can be optimally adapted to the ambient conditions at locations.

You can define the following parameters:

Parameters	Explanation	Values
Environment	Defines the ambient conditions	**Stable** | **Standard*** | **Unstable** | **Very unstable**

* Factory setting

Note
The number of available settings depends on the type of balance.

5.2.3 Measured value release

Navigation: [⊞] > [**System**] > [**Wghparam**] > **Value Release**

This setting can be used to define how quickly a measured value is recognized as stable by the balance and released.

You can define the following parameters:

Parameters	Explanation	Values
Value Release	Defines measured value release.	**Very fast** | **Fast** | **Reliable+Fast*** | **Reliable** | **Very reliable**

* Factory setting

5.2.4 AutoZero

Navigation: [⊞] > [**System**] > [**Wghparam**] > **AutoZero**

This menu item can be used to switch the automatic zero correction on or off.

Note
This menu item is not available for approved balances.

You can define the following parameters:

Parameters	Explanation	Values
AutoZero	Activates/deactivates the automatic zero correction. It corrects the zero deviations, e.g. that can occur due to slight fouling of the weighing pan.	**Off** | **On***

* Factory setting

5.3 Language

Navigation: [⊞] > [**System**] > [**Language**]

This menu item can be used to select the dialog language. The language is changed immediately. All windows and messages are displayed in the selected language.

Exception: interface parameters in the system settings are always in English.

Note
If the dialog language is changed, it is possible that access codes (password) cannot be entered. The password must therefore always be entered in the defined language!

You can define the following parameters:

Parameters	Explanation	Values
Language	Defines the preferred language. **Note** The language is normally preset for the country of use.	**English** | **Deutsch** | **Français** | **Español** | **Italiano** | **Russian** | **Katakana** | **Polski** | **Cestina** | **Magyar** | **Chinese** | **Japanese**

5.4 Peripherals

Various peripheral devices can be connected to the balance interface(s). This menu can be used to define the devices to be connected and interface parameters.

Each balance application supports specific peripheral devices. The control of peripheral devices can vary from application to application.

There are specific interface setting options for each of these devices. [**Off**] means that no device of this type is connected. [**RS232 built-in**] denotes the default installed RS232C interface. If further optional interfaces are available, these are displayed [**RS232 Option**]. At this point, only the parameters of the default installed RS232C interface are described.

Important

Only a single device can be activated for each available interface; all devices must be deactivated [**Off**]. When a new device is activated, the previously selected device is automatically deactivated.

The arrow buttons can be used to page forward or back to a menu page.

Navigation: [⊞] > [**System**] > [**Peripherals**]

You can define the following parameters:

Parameters	Explanation	Values
Printer	Printer.	**Off*** | **RS232 built-in** | **RS232 Option**
Host	External computer (bidirectional communication; the balance can send data to the PC and receive commands or data from it).	**Off** | **RS232 built-in*** | **RS232 Option**
LabX	METTLER TOLEDO LabX software enables the definition of complete dialog-based balance operations and can store and manage measured values as well as further data in a database on the PC.	**Off*** | **RS232 built-in** | **Ethernet Option**

LabX Controlled Device	This interface is only used with LabX. Connected devices (e.g. LV11 feeder) communicate directly with LabX).	**Off*** | **RS232 built-in** | **RS232 Option**
Secondary Display	Remote display (Model-dependent)	**Off*** | **RS232 built-in** | **RS232 Option**
Bar Code	Barcode scanner.	**Off*** | **RS232 built-in** | **RS232 Option**
Ext. Keyboard	External PC keyboard.	**Off*** | **RS232 built-in** | **RS232 Option**

* Factory setting

Note

Detailed information on optional interfaces and various peripheral devices can be found in the documentation supplied with these products.

When a device has been activated, the interface parameters for communication with this device, e.g. baud rate, data format, stop bits, handshake, end-of-line character, character set and **Continuous mode** (only for peripheral device **Host**) can be defined via the [**Define**] button.

These submenus are always displayed in English, irrespective of the dialog language selected.

You can define the following parameters:

Parameters	Explanation	Values
Baudrate	Defines the data transfer rate.	**600** | **1200** | **2400** | **4800** | **9600*** | **19200**
Bit / Parity	Defines the number of data bits and parity bits.	**7/No** | **7/Even** | **7/Odd** | **8/No***
Stop Bits	Defines the stop bits for data transfer.	**1 Stopbit*** | **2 Stopbits**
Handshake	Defines the synchronization for data transfer	**None** | **Hardware** | **Xon/Xoff***
End of line	Defines the end-of-line character	**<CR><LF>*** | **<CR>** | **<LF>**
Char Set	Defines the character set	**Ansi/Win*** | **IBM/DOS**
Continuous mode	Defines the transfer of weighing data	**Off*** | **On**

* Factory setting

Information on Continuous mode

In **Continuous mode**, the weighing data is continuously transferred via the interface. The **Continuous mode** is only available for the peripheral device **Host** and default installed RS232C interface [**RS232 built-in**]. When the **Continuous mode** is activated, additional setting options are available.

You can define the following parameters:

Parameters	Explanation	Values
Output Format	**MT-SICS** = the data is transferred in MT-SICS format (Mettler Toledo Standard Interface Command Set). MT-SICS operates bidirectional, i.e. the balance can also receive confirmations or commands from the host. A separate reference manual is available for MT-SICS. **PM** = emulates the data format of PM balances (unidirectional). **AT/MT** = the data is transferred in the format of METTLER TOLEDO AT and MT balances (unidirectional).	**MT-SICS*** | **PM** | **AT/MT**

Updates/sec.	Defines the number of datasets transferred via the interface per second.	**2** | **5*** | **6** | **10**

* Factory setting

5.5 Option

Navigation: [⊞] > [**System**] > [**Option**]

After the installation of specific interface options (e.g. Ethernet), an additional icon is displayed in the system settings. Global interface settings can be made via [**Option**]. These are described in the instructions supplied with the optional interface. This menu item contains only some basic information to help with general communication problems.

Note

These submenus are always displayed in English, irrespective of the dialog language selected.

The arrow buttons can be used to page forward or back to a menu page.

You can define the following parameters:

Parameters	Explanation	Values
DHCP	Activates/deactivates the Dynamic Host Configuration Protocol. The Dynamic Host Configuration Protocol is used to automatically assign to the client PC a currently unused IP address from an address pool. Other information such as the domain name, standard gateway and specific DNS server can also be transferred to the client.	**Off*** | **On**
IP-Address	Defines the IP address in the format "XXX.XXX.XXX.XXX" (X = 0 … 255). The IP address must be distinctive within a corporate network and conform to the conventions for IP addresses.	Any
Subnet Mask	Defines the subnet in the format "XXX.XXX.XXX.XXX" (X = 0 … 255). The subnet mask is used to inform the routers within a network which bits in the four quads in the IP address are significant for routing in the search for the addressed computer within a specific network.	Any
Standard Gateway	Defines the Standard Gateway Address in the format "XXX.XXX.XXX.XXX" (X = 0 … 255). This may be necessary if the network is connected to another network via a router. A gateway denotes the transition between two networks. A gateway computer is a special computer connected to both networks. Different protocols are converted in certain circumstances. A gateway can also be a transition from a logical (often also purely organizational) network to another, whereby both used the same protocol.	Any
Domain Name Server	Defines the Domain Name Server Address in the format "XXX.XXX.XXX.XXX" (X = 0 … 255). If domain names for calling network users are supported in the TCP/IP network, the domain name server address must be entered here.	Any
Hostname	Defines the computer or server. General computer or server (on which specific user services are normally provided). Often used for the computer to which a data link has been established.	**not available**

5.6 Terminal

Navigation: [⊞] > [**System**] > [**Terminal**]

This menu can be used to adapt the terminal to suit specific requirements and the display adjusted.

1 Tap [**Terminal**].
   ⇨ **Terminal** window is displayed.

2 Select the required menu item, e.g. **Brightness** and subsequently tap the associated button.
   ⇨ **Brightness** window is displayed.

3 Tap the plus or minus arrow key and confirm with [**OK**].

The arrow buttons can be used to page forward or back to a menu page.

You can define the following parameters:

Menu item	Explanation	Further information
Brightness	Adjusts the display brightness.	**See** Brightness [▸ 54]
Contrast	Selects the contrast.	**See** Contrast [▸ 54]
Sound	Set the beep volume.	**See** Beep [▸ 54]
Touch Function	Activates/deactivates the display touch function	**See** Touch function [▸ 55]
Touchadjust	Activates/deactivates the touch screen adjustment.	**See** Touch adjustment [▸ 55]

5.6.1 Brightness

Navigation: [⊞] > [**System**] > [**Terminal**] > **Brightness**

This menu item can be used to adjust the display brightness. The brightness is adjusted in 20% steps each time one of the two arrow keys is tapped.

You can define the following parameters:

Parameters	Explanation	Values
Brightness	Adjusts the display brightness (in 20% steps).	20 % … 100 % (100 %)*

* Factory setting

5.6.2 Contrast

Navigation: [⊞] > [**System**] > [**Terminal**] > **Contrast**

This menu item can be used to adjust the display contrast. The contrast is adjusted in 2% steps each time one of the two arrow keys is tapped.

You can define the following parameters:

Parameters	Explanation	Values
Contrast	Adjusts the display contrast (in 2% steps).	0 % … 100 % (50 %)*

* Factory setting

5.6.3 Beep

Navigation: [⊞] > [**System**] > [**Terminal**] > **Sound**

This menu item can be used to adjust the beep volume. The volume is increased in 10% steps each time one of the two arrow keys is tapped. Setting the volume to 0% switches off the beep.

You can define the following parameters:

Parameters	Explanation	Values
Sound	Adjusts the volume (in 10% steps)	0 % … 100 % (70 %)*

* Factory setting

5.6.4 Touch function

Navigation: [⊞] > [**System**] > [**Terminal**] > **Touch Function**

This menu item can be used to activate or deactivate the touch screen touch function. If the [**Touch Function**] is deactivated, the display will no longer respond to touch in weighing mode. Settings can no longer be made by tapping the display (exception: function keys).

Important

The touch function is always active in setting mode to allow settings to be made.

You can define the following parameters:

Parameters	Explanation	Values
Touch Function	Activates/deactivates the touch screen touch function.	**On** | **Off***

* Factory setting

5.6.5 Touch adjustment

Navigation: [⊞] > [**System**] > [**Terminal**] > **Touchadjust**

If the instrument does not respond correctly when a certain area of the display is tapped, the touch screen can be adjusted with [**Touchadjust**].

1 Tap [**Activate**].
   ⇨ A window is displayed.

2 Tap the flashing area. This procedure must be repeated several times.

3 The procedure can be interrupted at any time by tapping [**C**].

⇨ When all flashing areas have been selected, the window closes.

5.7 Date/Time

Navigation: [⊞] > [**System**] > [**Date/Time**]

This menu can be used to set the date and time.

You can define the following parameters:

Parameters	Explanation	Values
Date Format	Sets the date format. D = Day M = Month Y = Year	**D.MMM YYYY*** | **MMM D YYYY** | **DD.MM.YYYY** | **MM/DD/YYYY** | **YYYY-MM-DD** | **YYYY/MM/DD**
Date	Sets the date and time of the internal clock in the balance. A numeric input window is displayed. Enter the current date in the format day - month - year (DD.MM.YYYY), regardless of the date format selected for the display. **Note** This setting can also be made directly by tapping the date in weighing mode. A window is displayed in which the date can be directly entered.	**Day** | **Month** | **Year**
Time Format	Sets the time format.	**24:MM*** | **12:MM** | **24.MM** | **12.MM**

Time	Sets the time on the balance. M = Minutes Enter the current time in a 24-hour format (24.MM.SS, entry of the seconds is optional), regardless of the time format selected for the display. The input window corresponds to that for the date. The [**+1H**] and [**–1H**] keys can also be used for setting the time an hour forward or back. This facilitates switching between summer and winter time. **Note** This setting can also be made directly by tapping the time display in the weighing mode.	**Hours I Minutes**
Date/Time	Choose the date or the time to be shown in the upper right-hand corner of the display.	**Date*** I **Time**

* Factory setting

5.8 Rights

Navigation: [⊞] > [**System**] > [**Rights**]

This menu can be used to define and specify a password to protect menu areas.

⚠ CAUTION

Remember passwords!

Protected menu areas cannot be accessed without password.

a) Note passwords and keep them in a safe place.

1 Tap [**Rights**].
   ⇨ **Access Rights** window is displayed.

2 Beside e.g. **Password** > [**Define**].
   ⇨ An alphanumeric input window is displayed.

3 Enter the password. **Factory setting: 0**.

4 Confirm with [**OK**].

5 To abort, tap [**C**].

6 To exit the menu item, tap [**OK**].

The arrow buttons can be used to page forward or back to a menu page.

Attention

- The password must always be entered in the defined language.
- If the existing code is deleted and no new code is entered, an error message is displayed.

You can define the following parameters:

Parameters	Explanation	Values
Password	Creates new password or changes an existing password (max. 20 characters).	Any (0)*
System	All system settings.	**No Protection*** I **Password**
Weighing parameters	All weighing parameters available in the [**System**] > [**Weighing parameters**].	**No Protection*** I **Password**
Application	Selects the application [⊞].	**No Protection*** I **Password**

Application Setup	All application-specific settings [⚙].	**No Protection*** | **Password**
Access Rights	All access rights in which you are presently working from unauthorized access. This prevents unauthorized modification of the password and of the access rights.	**No Protection*** | **Password**

* Factory setting

5.9 Standby

Navigation: [⊞] > [**System**] > [**Standby**]

This menu can be used to define the time of balance inactivity after which the balance is automatically set to the standby mode.

Attention

The balance must be unloaded before it can change to standby mode.

Note

Irrespective of the standby mode setting, the display brightness is automatically reduced if the balance remains inactive for 15 minutes. If the displayed value should change during the course of 15 minutes (e.g. due to vibrations), the balance waits a further 15 minutes until the display brightness is reduced.

You can define the following parameters:

Parameters	Explanation	Values
Standby	Defines the energy saving function The standby mode corresponds to the state the balance assumes after being switched off with the [⏻] button. The balance can be switched on again by pressing the [⏻] button.	**Off*** | **30 min.** | **60 min.** | **120 min.** | **240 min.**

* Factory setting

5.10 Switch

Navigation: [⊞] > [**System**] > [**Switch**]

This menu item can be used to define settings for external switches for Aux connections. The METTLER TOLEDO **ErgoSens** or an external switch can be connected to the **Aux 1** and **Aux 2** sockets. This enables use of functions, e.g. taring, zeroing and printing. Each **ErgoSens** can be assigned a separate function. If no **ErgoSens** is connected or deactivated, select [**Off**].

1 Tap [**Switch**].
   ⇨ A selection window is displayed.

2 Select the function by tapping the button.

3 Change the settings and confirm with [**OK**].

You can define the following parameters:

Switch	Activates/deactivates the optional ErgoSens. Defines the function.	**Off*** | **->0<-** | **->T<-** | **Print**

* Factory setting

5.11 Factory

Navigation: [⊞] > [**System**] > [**Factory**]

This menu can be used to reset all balance settings to the factory settings.

⚠ CAUTION

Data loss after factory settings reset

After a reset, the balance is reset to the factory settings. All system and application-specific settings are reset to the factory settings. All individual settings as well as stored measured value are deleted!

1 Tap **Master Reset**.
   ⇨ **Activate factory settings?** window is displayed.
2 Confirm with [**OK**].
3 To abort, tap [**C**].
4 To exit the menu item, tap [**OK**].

⇨ The balance restarts with the factory settings.

5.12 Info

Navigation: [⊞] > [**System**] > [**Info**]

This menu can be used to define an identification for the balance and all balance information can be displayed.

Note

The [**Info**] function key can be used as a shortcut for the [**Show**] key. **See** Selecting function keys [▸ 61].

You can define the following parameters:

Parameters	Explanation	Values
Balance ID	Defines a designation for the balance (max. 20 characters). This facilitates the identification of individual balances where several balances are used. This identification is also printed in the protocols. Alphanumeric characters can be entered in the input window.	Any
Info	Displays the balance information and built-in options. This information is of particular importance for the service engineer. This information should be available before contacting METTLER TOLEDO customer service.	**Show**

Note

The balance information can be recorded (provided a printer is connected and activated as an output device in the peripheral device settings) by pressing the [🖶] button. **See** Peripherals [▸ 51].

6 Weighing Application

Navigation: [⊞] > [**Weighing**]

This section provides information and descriptions of setting options for practical use of the application.

Selecting the application

1 Press [⊞].

2 Tap the [**Weighing**] icon in the selection window.

⇨ The selected application is active.

⇨ The balance is ready for weighing.

6.1 Weighing application settings

Navigation: [⊞] > [**Weighing**] > [⚙]

The procedure for performing a simple weighing has already been described, **see** Weighing for the first time [▸ 27]. In addition to the described procedures (zeroing, taring and performing a simple weighing), the balance offers a number of options for adjusting the application to suit specific requirements.

1 Press [⚙].

⇨ A window with application-dependent settings appears.

2 Select the required menu item (e.g. **Function Keys**).

3 Change the settings and confirm with [**OK**].

4 To exit the menu without saving, tap [**C**].

5 To restore the factory default settings, tap [**STD**].

6 To exit the menu item, tap [**OK**].

The arrow buttons can be used to page forward or back to a menu page.

Note

Settings can be printed out at any time in the application-dependent settings menu.

- A printer is connected and activated as an output device in the peripheral device settings.

- To print out the settings, press [🖶].

Example: Printout

```
Weighing
Function Keys
ID                    -
Display               2
Lotcounter            -
Adjust.int            1
Adjust.ext            -
Test int              -
Test ext              4
1/10d                 3
Header                -
Footer                -
Info Field
ID1                   -
ID2                   -
ID3                   -
Info Unit             -
Tare                  1
Gross                 2
AutoPrint           Off
Display Unit          g
Info Unit             g
```

You can define the following parameters:

Menu item	Explanation	Further information
Function Keys	Definition of function keys to appear at the bottom of the display. These keys enable direct access to specific functions.	**See** Selecting function keys [▸ 61]
Info Field	Definition of information fields to be displayed.	**See** Selecting information fields [▸ 62]
AutoPrint	Activates/deactivates automatic weighing result printout.	**See** Specifications for automatic protocol printout [▸ 63]
Display Unit	Definition of unit for result display.	**See** Selecting weighing units [▸ 63]
Info Unit	Definition of an additional weighing unit. This appears in the respective display information field.	**See** Selecting weighing units [▸ 63]
Custom Unit	Definition of a specific weighing unit.	**See** Defining free weighing units [▸ 64]
Protocol	Selects data to be shown in the weighing protocols.	**See** Protocol definition [▸ 65]
Print Key	Definition of the behavior of the [🖶] key for manual weighing result printout.	**See** Specifications for manual protocol printout [▸ 67]
Transfer Key	Formats data output via the [**Transfer**] function key.	**See** Output data formatting (transfer key) [▸ 67]
Identification	Defines identifications.	**See** Definition of identifications [▸ 70]
Bar Code	Defines how barcode data is processed. These settings are only relevant if a barcode scanner is connected.	**See** Instructions for processing barcode data [▸ 70]
Ext. Keyboard	Defines how keyboard entries is processed. These settings are only relevant if an external keyboard is connected.	**See** Instructions for processing keyboard entries [▸ 71]

MinWeigh	Activates/deactivates the minimum weight function. The minimum weight function ensures that the weighing results are within defined tolerances appropriate to the requirements of your quality assurance system.	**See** MinWeigh function settings [▸ 71]

6.1.1 Selecting function keys

Navigation: [⊞] > [**Weighing**] > [⚙] > **Function Keys**

Function keys enable direct access to specific functions and settings in the application. A function can be activated by tapping a key.

The function keys are displayed in the application at the bottom of the display. The numbers define the sequence in the display.

- Activate or deactivate function keys by tapping.
- To redefine the sequence, all function keys must be deactivated and subsequently activated in the required sequence.

The arrow buttons can be used to page forward or back to a menu page.

▪ Application is activated.

1 Press [⚙].
   ⇨ A window with application-dependent settings appears.

2 Tap **Function Keys** > [**Define**].

3 Select the **Function Keys** which you need.
   ⇨ The function key is automatically numbered.

4 Change the settings and confirm with [**OK**].

6.1.1.1 Function key overview

	Designation	Explanation
	ID	This function key can be used for the assignment of individual weighing identifications (descriptive texts), which are also shown in the protocols. After tapping this function key, a window is displayed in which the ID can be selected and text entered. Information for the definition of identifications, **see** Definition of identifications and protocol headers [▸ 70]. Information on practical working with identifications, **see** Working with identifications [▸ 73].
	Display	This function key is used as a shortcut for displaying the weighing result in three different size, **see** Display [▸ 15].
	Lotcounter	Activates the lot counter and defines a start value. Information on settings, **see** Working with the lot counter [▸ 72].
	Adjust.int	Balance adjustment with internal adjustment weight. Information on making and recording adjustments, **see** Adjustment with internal weight [▸ 76].

	Adjust.ext	Balance adjustment with an external adjustment weight. Information on making and recording adjustments, **see** Adjustment with external test weight [▸ 76]. **Note** External adjustment is not available on certain legal-for-trade balances.
	Test int	Balance adjustment test with an internal test weight. Information on performing and recording tests, **see** Testing the adjustment with internal weight [▸ 77].
	Test ext	Testing balance adjustment with an external test weight. Information on performing and recording tests, **see** Testing the adjustment with external test weight [▸ 77].
	1/10d	Changes the resolution of the weighing result. Information on resolution settings, **see** Changing the weighing result resolution [▸ 72]. **Note** For metrological reasons, resolution selection is not available on certain legal-for-trade balances.
	Header	Prints the protocol header. Information on weighing protocol settings, **see** Protocol definition [▸ 65].
	Footer	Prints the protocol footer. Information on weighing protocol settings, **see** Protocol definition [▸ 65].
	Transfer	Transfers the current weight, without further data (additional information) directly to a connected host computer. The output data can be formatted. Information on output data formatting, **see** Output data formatting (transfer key) [▸ 67].
GWP	**Test Sequence**	Displays a list of tasks set to [**Manual**]. Information on settings, **see** Assigning a test sequence to a task [▸ 46].
	Info	This function key is used as a shortcut for the [**Show**] key. Information on settings, **see** Info [▸ 58].
	GWP History	Opens the history. All test results saved in the GWP history are displayed. Information on history settings, **see** Test history [▸ 48].

Factory setting: [**Adjust.int**], [**Display**] and [**1/10d**] activated, in this sequence.

6.1.2 Selecting information fields

Navigation: [⊞] > [**Weighing**] > [⚙] > **Info Field**

The information fields in the display provide constant information on, e.g. set values, measured results.

The numbered fields are displayed in the application. The numbers define the information field sequence in the display (maximum 3 information fields).

- Information fields can be activated or deactivated by tapping.
- To redefine the sequence, all information fields must be deactivated and then activated in the required sequence.

▪ Application is activated.

1 Press [⚙].

⇨ A window with application-dependent settings appears.

2 Tap **Info Field** > [**Define**].

3 Select the information fields that you need.

⇨ The information field is automatically numbered.

4 Change the settings and confirm with [**OK**].

The arrow buttons can be used to page forward or back to a menu page.

You can define the following parameters:

Parameters	Explanation	Values
Info Field	Activates/deactivates the associated info fields (max. 3). **Lotcounter** = displays the item counter status. **RefTare** = if the [**MinWeigh**] function is activated, this information field displays the upper reference tare limit. **MinWeigh** = if the [**MinWeigh**] function is activated, this information field displays the required minimum weight based on the reference tare. **MW-Method** = f the [**MinWeigh**] function is activated, this information field displays which of the three MW methods are used for the QA standard.	**ID1** | **ID2** | **ID3** | **Lotcounter** | **Info Unit** | **Tare** | **Gross** | **RefTare** | **MinWeigh** | **MW-Method**

Factory setting: None

6.1.3 Specifications for automatic protocol printout

Navigation: [⊞] > [**Weighing**] > [⚙] > **AutoPrint**

This menu item can be used to define whether and under which conditions the balance automatically records the weighing result. Information defined for recording single values is printed.

See Protocol definition [▸ 65].

1 Press [⚙].

⇨ A window with application-dependent settings appears.

2 Beside **Autom. WeightEntry**, tap the associated button.

3 Change the settings and confirm with [**OK**].

You can define the following parameters:

Parameters	Explanation	Values
Off	Deactivated protocol printout. For print the result press [🖶].	None
On	When the net weight is reached and there has been a minimal change in weight, the weighing result is printed automatically. **Attention** The net weight and the limit are model-dependent.	None

Factory setting: [**Off**] Automatic entry disabled.

6.1.4 Selecting weighing units

Navigation: [⊞] > [**Weighing**] > [⚙] > **Display Unit** or **Info Unit**

The menu items **Display Unit** and **Info Unit** can be used to define the weighing units to be used. The weighing result can simultaneously be displayed in two different weighing units by selecting different units. The same units are available for selection under both menu items.

After changing the **Display Unit**, the current weighing result as well as the values in the information fields **Tare** and **Gross** are displayed in the new weighing unit. The **Info Unit** is used for the information field with the same name.

See Selecting information fields [▸ 62].

Note

- The number of available units is model-dependent.
- All available units are either displayed together or shown as a rolling list.

1 Press [⚙].
   ⇨ A window with application-dependent settings opens.

2 Beside **Display Unit** or **Info Unit**, tap the associated button.
   ⇨ A selection window appears.

3 Change the settings and confirm with [**OK**].

You can define the following parameters:

Parameters	Explanation	Values
Display Unit	Defines the unit (model-dependent).	**g** | **kg** | **ct** | **lb** | **oz** | **ozt** | **GN** | **dwt** | **mom** | **msg** | **tlh** | **tls** | **tlt** | **tola** | **baht**
Info Unit	Defines the unit (model-dependent).	**g** | **kg** | **ct** | **lb** | **oz** | **ozt** | **GN** | **dwt** | **mom** | **msg** | **tlh** | **tls** | **tlt** | **tola** | **baht**

Factory setting: Model-dependent, for both units.

6.1.5 Defining free weighing units

Navigation: [⊞] > [**Weighing**] > [⚙] > **Custom Unit 1** or **Custom Unit 2**

A specific weighing unit can be defined under the menu items **Custom Unit 1** and **Custom Unit 2**. This allows calculations (e.g. surfaces or volumes) to be carried out directly during determination of the weighing result. The free weighing units are available in all menus and input fields in which weighing units can be selected.

1 Press [⚙].
   ⇨ A window with application-dependent settings appears.

2 Tap **Custom Unit 1** or **Custom Unit 2** > [**Off**].
   ⇨ **Custom Unit 1** or **Custom Unit 2** window appears.

3 Tap [**On**] > [**Define**].
   ⇨ A selection window appears.

4 Change the settings and with [**OK**].

You can define the following parameters:

Parameters	Explanation	Values
Formula	Defines how subsequently defined value for [**Factor**] is calculated. There are 2 formulae available, where F stands for the factor and **net** for the weight. **F * Net** = multiplies the net weight by the factor. **F / Net** = factor is divided by the net weight. The formula can be used, for example, to simultaneously take into account a known error factor while weighing.	**F * Net** | **F / Net**
Factor	Defines the factor (-10^7 … 10^7) with which the effective weighing result (net weight) is calculated via the previously selected formula.	Any

Name	Defines a designation for the free weighing unit (max. 4 characters). **Note** The entry of weighing units is not permitted.	Any
Result Output Format	Defines the formatting for the weighing result. **Example** A setting of "0.05" defines 2 places after the decimal point with rounding to 5. A determined result of 123.4777 is consequently displayed as 123.50. **Note** This function can only be used to reduce the resolution of the weighing result. No value must therefore be entered that exceeds the maximum balance resolution! Values that are too small are automatically rounded off.	Any

Factory setting: [**Off**].

6.1.6 Protocol definition

Navigation: [⊞] > [**Weighing**] > [⚙] > **Protocol**

This menu item can be used to define information to appear in the protocols. This extensive menu is divided into 3 submenus in which options for the header, recording of single values and the footer can be defined.

The check marked data items are printed in the protocol.

- Information can be activated or deactivated by tapping.

▪ Application is activated.

1 Press [⚙].
   ⇨ A window with application-dependent settings appears.

2 Tap **Protocol** > [**Define**].
   ⇨ **Protocol** window appears.

3 Tap (e.g. **Header**) > [**Define**].

4 Select the information key which you need.

5 Confirm with [**OK**].

The arrow buttons can be used to page forward or back to a menu page.

Note
The results and data can be printed out at any time.

▪ A printer is connected and activated as an output device in the peripheral device settings.

- To print out the settings, press [🖶].

Example: Printout

Header / Footer

```
------- Weighing -------
25.Jul 2014        16:09
Balance Type     XS4002S
WeighBridge SNR:
              1234567890
Terminal SNR: 1234567891
Balance ID       E-Lab 1
Customer      Smith Inc.
Order             RP_222
Lot                09-34
MW-Method            Off
Min.Weight by Tare

Signature

.......................
```

Single value

```
------- Weighing -------
25.Jul 2014        17:05
     N       121.53 g
     T        41.37 g
     G       162.90 g
------------------------
```

Header line of protocols

This submenu can be used to define information to be printed in the protocol header (before the results). The header is automatically printed if it has been defined as part of the protocol.

However, the header can also be printed separately by tapping the [**Header**] function key.

Reporting of single values

This submenu can be used to define the information to be reported for each individual result.

Printing takes place by pressing the [🖶] key.

Protocol footer

This submenu can be used to define the information to be printed in the protocol footer after the results (single values).

The footer can be printed by tapping the [**Footer**] function key.

You can define the following parameters:

Parameters	Explanation	Values
Header	Define the information to be printed in the protocol header (before the results). **SNR** = The serial numbers of the balance and terminal are printed. The balance type is generated by the balance and cannot be changed by the user. **MW-Method** = reports the selected method for the minimum weight.	**Blank Line** | **Appl. Name*** | **Date/Time** | **Balance Type** | **SNR** | **Balance ID** | **ID1** | **ID2** | **ID3** | **MW-Method** | **Signature**
Single value	Define the information to be reported for each single result. **MW-Method** = reports the selected method for the minimum weight.	**Header** | **Blank Line*** | **ID1** | **ID2** | **ID3** | **MW-Method** | **Tare** | **Net*** | **Gross** | **Info Unit** | **Signature** | **Footer**

Footer	Define information to be printed in the protocol footer after the results (single values). **SNR** = The serial numbers of the balance and terminal are printed. The balance type is generated by the balance and cannot be changed by the user. **Nom.,+Tol,-Tol** = reports the defined nominal weight and the defined plus and minus tolerances. **MW-Method** = reports the selected method for the minimum weight.	**Blank Line** | **Appl. Name** | **Date/Time** | **Balance Type** | **SNR** | **Balance ID** | **ID1** | **ID2** | **ID3** | **MW-Method** | **Signature*** | **Dash Line** | **3 Blank Lines***

* Factory setting

6.1.7 Specifications for manual protocol printout

Navigation: [⊞] > [**Weighing**] > [⚙] > **Print Key**

This menu item can be used to define the behavior of the [🖶] key (protocol printout).

1 Press [⚙].
   ⇨ A window with application-dependent settings opens.

2 Beside **Print Key**, tap the associated button.
   ⇨ A selection window appears.

3 Change the settings and confirm with [**OK**].

You can define the following parameters:

Parameters	Explanation	Values
Print Key	Define the behavior of the [🖶] key. **Stable** = the protocol is only printed if the weighing result is stable. **Dynamic** = the protocol is printed immediately, regardless of whether the weighing result is stable.	**Stable*** | **Dynamic** | **Off**

* Factory setting

6.1.8 Output data formatting (transfer key)

Navigation: [⊞] > [**Weighing**] > [⚙] > **Transfer Key**

A stable weight can be transferred via the interface to a host computer with the [**Transfer**] function key. This menu item can be used to define the formatting for output values. This can be necessary if the balance is operated together with other instruments, programs or peripheral devices that use a specific data format. It can be defined whether data is output to the host or also to the printer.

1 Press [⚙].
   ⇨ A window with application-dependent settings appears.

2 Tap **Transfer Key** > [**Define**].
   ⇨ **Transfer Key** window appears.

3 Change the settings and confirm with [**OK**].

Menu structure

Main menu	Submenu	Further information
Data output format	**Standard**	**See** Output format [▸ 68]
	Customise	
Data transfer to printer	**Off**	**See** Data output to the printer [▸ 69]
	On	

6.1.8.1 Output format

Data output is set by default to a standard format that generally corresponds to the weight displayed at the terminal, followed by an end-of-line character defined for the host. Negative weights are displayed with a minus sign. The output weight is left-justified.

See Peripherals [▸ 51].

Example (–12.8934 g):

1	2	3	4	5	6	7	8	9	10	11	12
-	**1**	**2**	**.**	**8**	**9**	**3**	**4**		**g**	**C_F**	**L_F**

Note

- If the resolution of the displayed value is reduced, the weight is also transferred with reduced resolution to the host.
- If the balance has overload or underload at the time of data transfer, **UNDERLOAD** or **OVERLOAD** is transferred instead of the weight.

1 The output format can be changed by tapping the associated button under **Data output format**.

2 Activate [**Customise**] and subsequently tap the [**Define**] button.

Menu structure

Main menu	Submenu	Further information
Net indicator field	**Off**	**See** section Net weight icon
	Field length	
Weight field	**Field length**	**See** section Weight format
	No. of decimal digits	
	Sign	
	Sign position	
Unit field	**Off**	**See** section Weight unit field
	Field length	

Net weight icon

In the standard output format, net weights are not specially marked. To place an **N** in front of net weights, this function can be activated and also the field length defined. The net symbol is left-justified in the field.

You can define the following parameters:

Parameters	Explanation	Values
Off	Net weight icon deactivated.	None *
Field length	Activates the net weight icon. Defines the field length (max. 10 characters). **Note** If the balance was not tared, the net symbol is not transferred. Blank characters are transferred appropriate to the selected field length.	1 … 10 (5 characters)*

* Factory setting

Weight format

You can define the following parameters:

Parameters	Explanation	Values
Field length	Defines the total length of the weight data field including sign, decimal point and decimal places (max. 20 characters). **Note** Irrespective of their setting, as many places are output as necessary for complete transfer of the weight displayed at the terminal. The weight is output right-justified.	1 … 20 (10)*
No. of decimal digits	Defines the number of decimal places. If the set value has less than the number of decimal places displayed at the terminal, a rounded value with the selected number of decimal places is transferred.	0 … 6 (max. number of places of the balance)*
Sign	Defines the sign. **Always** = each weight is preceded by a plus or minus sign. **Neg. values** = only negative values are preceded by a minus sign. Positive values are transferred without sign.	**Always** | **Neg. values***
Sign position	Defines whether the sign should directly precede the weight (right-justified) or left-justified.	**-xxx.yy*** | **- xxx.yy**

* Factory setting

Weight unit field

In the standard output format, each weight is output with the weight unit (appropriate to the current display unit). This menu can be used to select whether weights are transferred with or without unit and also define the field length for the weight unit.

You can define the following parameters:

Parameters	Explanation	Values
Off	Defines whether weights are transferred with or without unit.	None (Output of weight unit activated)*
Field length	Defines the field length (max. 5 characters). Irrespective of their setting for the field length, as many places are output as necessary for complete transfer of the weight displayed at the terminal. The weight unit is output left-justified (separated from the weight by a space).	1 … 5 (3)*

* Factory setting

6.1.8.2 Data output to the printer

When the [**Transfer**] function key is pressed, the data is normally only transferred to the host. Data can also be sent to the printer by activating the setting.

Note
The previously described data formatting settings have no influence on data output to the printer. This is determined only by the protocol settings.

You can define the following parameters:

Parameters	Explanation	Values
Data transfer to printer	Activates/deactivates the data output to the printer.	**Off*** | **On**

* Factory setting

6.1.9 Definition of identifications

Navigation: [⊞] > [**Weighing**] > [⚙] > **Identification**

This menu item can be used to activate the 3 identifications or change their designations available under the [**ID**] function key. The entered designations appear in the respective information fields (e.g. company name) and can be printed out in the weighing protocols

Default ID designations are [**ID1**], [**ID2**] and [**ID3**]. These can be replaced with specific designations (e.g. customer, order). The ID is subsequently available with the new designation under the [**ID**] function key.

1 Press [⚙].
   ⇨ A window with application-dependent settings appears.

2 Tap **Identification** > [**Define**].
   ⇨ **Identification** window appears.

3 Settings can be changed by tapping the associated button.
   ⇨ An alphanumeric input window appears.

4 Enter the designation and confirm with [**OK**].

Parameters	Explanation	Values
Identification	Activates/deactivates the 3 identifications or change their designations. **ID1 Name** … **ID3 Name** = defines the designation (max 20 characters).	**ID1 Name*** | **ID2 Name** | **ID3 Name**

* Factory setting

6.1.10 Instructions for processing barcode data

Navigation: [⊞] > [**Weighing**] > [⚙] > **Bar Code**

If a barcode reader or keyboard is connected to the balance, this menu can be used to define how the data is to be processed.

- The external device is appropriately configured in the [**Peripherals**] system setting.

1 Press [⚙].
   ⇨ A window with application-dependent settings opens.

2 Beside **Bar Code**, tap the associated button.
   ⇨ A selection window appears.

3 Change the settings and confirm with [**OK**].

You can define the following parameters:

Parameters	Explanation	Values
Bar Code	Defines how the data is be processed. **ID1** … **ID3** = the received barcode data is treated as identification texts and the corresponding identification assigned. **Host** = the data is transferred directly to a connected PC. If no PC is connected or this data cannot be received, it is ignored. **Open Input** = the data is written in the currently open input window (e.g. lot counter or ID). The window is automatically closed after the data is processed. If no input window is open, the data is ignored.	**Off*** | **ID1** | **ID2** | **ID3** | **Host** | **Open Input**

* Factory setting

6.1.11 Instructions for processing keyboard entries

Navigation: [⊞] > [**Weighing**] > [⚙] > **Ext. Keyboard**

If an external keyboard is connected to the balance, this menu item can be used to specify how the data is to be processed.

- The external device is appropriately configured in the [**Peripherals**] system setting.

1 Press [⚙].
   ⇨ A window with application-dependent settings opens.

2 Beside **Ext. Keyboard**, tap the associated button.
   ⇨ A selection window appears.

3 Change the settings and confirm with [**OK**].

You can define the following parameters:

Parameters	Explanation	Values
Ext. Keyboard	Defines how the data is be processed. **Host** = the data is transferred directly to a connected PC. If no PC is connected or this data cannot be received, it is ignored. **Open Input** = the data is written in the currently open input window (e.g. lot counter or ID). The window is automatically closed after the data is processed. If no input window is open, the data is ignored.	**Off** | **Host** | **Open Input***

* Factory setting

6.1.12 MinWeigh function settings

Navigation: [⊞] > [**Weighing**] > [⚙] > **MinWeigh**

Attention
The menu with the settings for the **MinWeigh** function is deactivated by default and not accessible. The **MinWeigh** function must be activated and programmed by a service engineer. If this function is required, but is not accessible in the menu, please contact your METTLER TOLEDO representative.

MinWeigh

The **MinWeigh** function ensures that the weighing results are within defined tolerances appropriate to the requirements of your quality assurance system.

The service engineer will determine the required minimum weights based on your QA requirements and subsequently load these values into the balance. Up to 3 tare weights can be defined with the corresponding minimum weights. The service engineer will set the weighing parameters to the values required for the maintenance of tolerances.

See Weighing parameters [▸ 49].

Note
After programming the balance, the service engineer will issue a certificate. This records the measurements and tolerances as well as corresponding tare and minimum weights for weighing. These settings cannot be changed by the user as long as the **MinWeigh** function is activated.

- The **MinWeigh** function is activated.

1 Press [⚙].
   ⇨ A window with application-dependent settings appears.

2 Beside **MinWeigh**, tap the associated button.
   ⇨ **MinWeigh** window appears.

3 Tap [**On**] > [**Define**].

4 Change the settings and confirm with [**OK**].

You can define the following parameters:

Parameters	Explanation	Values
Method	Selects the method programmed by the service engineer according to your instructions. Up to 3 methods can be defined, e.g. [**USP**].	Any
Info	Displays information relating to the **MinWeigh** function (method, date of next test by the service engineer and required minimum weights based on reference tare weights defined by the service engineer). The information can be printed out by pressing the [▤] key.	**Show**

Factory setting: [**Off**].

6.2 Working with the weighing application

Navigation: [⊞] > [**Weighing**]

This section describes the use of various functions of the **Weighing** application in practice.

6.2.1 Changing the weighing result resolution

The balance is set by default so that the weighing result is displayed with the maximum resolution, depending on the particular model (corresponding to 1d). The weighing result resolution can be changed at any time.

Note
This function key are inactive when the **MinWeigh** function is active.

- Function key is activated.

- Tap the function key.
  ⇨ When the function key is tapped again, the balance displays the result with normal resolution again.

1/10d Displays the result in a 10x lower resolution.

6.2.2 Working with the lot counter

The lot counter places a number in front of each weight during protocol printing, which is automatically incremented by 1 with each printout.

Note
When working with the lot counter, it is recommended to also activate the associated information field. This allows the current lot counter reading to be displayed at any time.

Each time a printout is started with the [▤] button, the weights are preceded by a lot counter, which is incremented by 1 with each new printout. When the lot counter reaches the maximum value of 999, the numbering starts at 1 again.

Note
The lot counter also functions with automatic protocol printout.

See Specifications for automatic protocol printout [▸ 63].

- A printer is connected and activated as an output device in the peripheral device settings.

- To print out the settings, press [▤].

Example: Printout

```
1 N       135.87 g

2 N       184.24 g

3 N       117.96 g
```

Lotcounter

- Function key is activated.

1 Tap [**Lotcounter**].
   ⇨ A numeric input window appears.

2 Enter the start value for the lot counter (1 … 999).
   The value 0 is preset by default, i.e. the lot counter is deactivated.

3 Confirm with [**OK**] to activate the lot counter.

6.2.3 Working with identifications

Identifications are descriptive texts for individual weighing processes that allow perfect assignment of weighing objects to specific customer orders. The identifications are also printed on the protocols (or transferred to a connected computer).

The 3 identifications are designated by default with [**ID1**], [**ID2**], [**ID3**] and [**ID4**]. These designations can be replaced with other titles to suit the particular application (max. 20 characters). The selected designations (e.g. **customer** for the [**ID1**], **order** for the [**ID2**] and **batch** for the [**ID3**]) are subsequently available under the [**ID**] function key.

Note
If the IDs are deactivated, the function key is grayed and cannot be actuated. In this case, the IDs must first be activated before they can be used.

See Definition of identifications [▸ 70].

When working with identifications, it is recommended to also activate the respective information fields. The information fields show the designations entered for the identifications.

See Selecting information fields [▸ 62].

If the weighing protocol is defined in such a way that the identifications are also printed, the defined ID designations, e.g. **[Customer]** and the entered text, e.g. **METTLER TOLEDO** are printed out.

- A printer is connected and activated as an output device in the peripheral device settings.

- To print out the settings, press [🖶].

Example: Printout

```
------- Weighing -------
25.Jul 2014        17:21
Client
          METTLER TOLEDO
Order         MT-18/2004
Sample               1/4
     N       242.83 g
     T        20.76 g
     G       263.59 g
```

ID

- Function key is activated.

1 Tap [**ID**].
   ⇨ A selection window with the available identifications appears.

2 Tap the associated button to be processed, e.g. **[Customer]**.
   ⇨ An alphanumeric input window appears.

3 Enter the designation, e.g. **METTLER TOLEDO** and confirm with [**OK**].
   ⇨ When all entries have been made, the selected identifications can be rechecked against the information fields in the display.
   ⇨ All identification texts remain stored until they are replaced with new ones.

6.2.4 Working with the "MinWeigh" function

The **MinWeigh** function ensures that the weighing results are within defined tolerances appropriate to the requirements of your quality assurance system. This function must be activated and programmed by a service engineer.

It also recommended to activate the three information fields **MinWeigh**, **RefTare** and **Tare**.

Note
If several reference tare weights (and the associated minimum weights) were programmed by the service engineer, the required minimum weight automatically changes appropriate to the applied tare weight.

The weighing result can be printed with the [🖶] key. The example printout shows part of a sample protocol containing specifications for the **MinWeigh** function (method, reference tare weight and required minimum weight) as well as the current weights. The asterisk to the left of the net weight indicates that the minimum weight in the example was not reached and the value does not satisfy the quality assurance requirements.

- A printer is connected and activated as an output device in the peripheral device settings.

- To print out the settings, press [🖶].

Example: Printout

```
MW-Method            USP
Ref. Tare    120.00 g
MinWeigh      20.00 g
    *N        17.03 g
     T        46.85 g
     G        63.88 g
```

- **MinWeigh** function is activated.

1 Activate the **MinWeigh**, **RefTare** and **Tare** information fields.
   ⇨ The values and references are displayed in the information field.
   ⇨ In the display to the left of the weighing result is a small weight icon with the character "<".

2 Press [→**0**←].
   ⇨ Sets the display to zero.

3 Place the tare weight (weighing container) on the weighing pan and press [→**T**←] to tare the balance.
   ⇨ The balance determines the tare weight and displays it in the **Tare** information field.
   ⇨ The **Net** symbol (net weight) is displayed next to the weight display.

4 Place the weighing object on the balance, e.g. 20 g.
   ⇨ During the weighing operation, the weight is initially displayed in a light color to indicate that the minimum weight has not yet been reached.

⇨ When the required minimum weight is reached, the weight is displayed in dark digits and the small weight icon extinguishes.

Note
If the status icon (small weight icon with clock) appears at the top right of the display (behind the date and time), the next test for the **MinWeigh** function is due. Contact the relevant customer service department. A service engineer will perform the **MinWeigh** test as quickly as possible.

Example

When working according to GMP, the permissible tolerance is 1%, 2 s. When working according to USP, this is 0.1 %, 2 s.

6.3 Balance adjustment and testing

Navigation: [⊞] > [**Weighing**]

Like any precision instrument, the balance must be adjusted at regular intervals. The balance offers extensive options for adjustment and testing.

Deviations must be able to be identified at an early stage and process tolerances checked. The risk can be minimized by regular testing.

The adjustment is intended for adjusting the sensitivity of the balance. For this purpose, at least one reference weight is placed on the weighing pan either manually or motorized. This is weighed and the indicated weight is stored. The sensitivity of the balance is subsequently corrected by the required amount.

The test is intended for testing the sensitivity of the balance.

See Settings for adjustments and tests [▸ 35].

The balance is set to automatic adjustment with FACT at the factory. FACT adjusts the balance fully automatically based on predefined criteria. Manual adjustments and/or tests can be carried out as required with the internal or an external weight.

If a printer is connected to the balance, the adjustments can be printed out according to user-specific settings.

See Protocol – Definition of adjustment and test reports [▸ 49].

- A printer is connected and activated as an output device in the peripheral device settings.

- To print out the settings, press [🖶].

The following descriptions assume that the [**Adjust.int**], [**Adjust.ext**], [**Test int**] and [**Test ext**] function keys are activated for adjustment and tests.

6.3.1 Adjustment

6.3.1.1 Fully automatic adjustment FACT

FACT adjusts the balance automatically based on predefined temperature criteria.

Note
FACT is activated several times in the first 24 hours after connection to the power supply, irrespective of the selected criteria.

After meeting a predefined temperature criterion, the small FACT status icon appears at the top right of the display (behind the date and time). The balance thus indicates the need to make a FACT adjustment.

1 Unload the balance.

2 Do not select any key for 2 minutes.
   ⇨ Adjustment starts automatically.

During the adjustment, a window with information on the current adjustment is displayed. If the balance is in use at the time of adjustment, adjustment can be ended with the [**Cancel**] button. Adjustment is restarted by the balance at the next opportunity.

When adjustment is complete, the balance automatically returns to the application. The small weight icon at the top right of the display extinguishes. Each adjustment is automatically recorded based on the selections made in the system settings for recording adjustments

The described procedure is based on the factory setting. The procedure for internal adjustment can be extended with internal tests with **Advanced Options**.

See Advanced options [▸ 47].

6.3.1.2 Adjustment with internal weight

Adjust.int Adjustment of the balance with the built-in weight can be initiated by tapping this function key. This can take place as required.

- [**Adjust.int**] function key is activated.

1 Tap [**Adjust.int**].
   ⇨ An information window opens.
   ⇨ The motorized lowering and lifting motion of the internal weight is audible.

2 If **Adjustment done** appears, confirm with [**OK**].

3 If **Adjustment abort** appears:
   - If adjustment is aborted, confirm with [**OK**].
   - If adjustment is aborted by the balance, tap [**Retry**].

6.3.1.3 Adjustment with external test weight

Note
Depending on the country-specific requirements, adjustment with an external weight for calibration balances may not be available.

After meeting a predefined temperature criterion, the small adjustment icon appears at the top right of the display (behind the date and time). This is an indication that the balance requires adjustment.

Adjust.ext Adjustment of the balance with an external test weight can be initiated by tapping this function key. This can take place as required.

Adjustment sequence

- [**Adjust.ext**] function key is activated.
- **Test/Adj. Weight** are defined.

1 Tap [**Adjust.ext**].
   ⇨ A list is displayed for selection of the test weight.

2 Select a test weight by tapping.
   ⇨ Adjustment starts.

3 Use the correct test weight.
   Note
   Ensure that the correct test weight is used, otherwise the adjustment will be aborted with an error message.
   ⇨ The required weight flashes at the bottom of the window and adjustment takes place automatically.

4 Remove the test weight from the weighing pan when adjustment is complete.
   ⇨ When the process is complete, one of the following messages appears.

5 If **Adjustment done** appears, confirm with [**OK**].

6 If **Adjustment abort** appears:
   - If adjustment is aborted, confirm with [**OK**].
   - If adjustment is aborted by the balance, tap [**Retry**].

6.3.2 Testing

6.3.2.1 Testing the adjustment with internal weight

The test is intended for testing the sensitivity of the balance.

Test int	The balance can be tested for correct adjustment using the internal weight by tapping this function key. This can be carried out as required.

- [**Test int**] function key is activated.

1 Tap [**Test int**].
   ⇨ An information window opens.
   ⇨ The motorized lowering and lifting motion of the internal weight is audible.
   ⇨ When the process is complete, one of the following messages appears.

2 If **Test done** appears, confirm with [**OK**].

3 If **Test Aborted!** appears:
   - If the test is aborted by the user, confirm with [**OK**].
   - If the test aborted by the balance, tap [**Retry**].

6.3.2.2 Testing the adjustment with external test weight

Test ext	The balance can be tested for correct adjustment with an external test weight by tapping this function key. This can be carried out as required.

- [**Test ext**] function key is activated.
- **Test/Adj. Weight** are defined.

1 Tap [**Test ext**].
   ⇨ A list is displayed for selection of the test weight.

2 Select a test weight by tapping.
   ⇨ The test starts.

3 Use the correct test weight. The ID and certificate number of the respective test weight are displayed if available.
Note
Ensure that the correct test weight is used, otherwise the test sequence will be aborted with an error message.
⇨ The required weight flashes at the bottom of the window and the test sequence takes place automatically.

4 Remove the test weight from the weighing pan when the test is complete.
⇨ When the test is complete, one of the following messages appears.

5 If **Adjustment done** is displayed, confirm with [**OK**].

6 If **Adjustment abort** appears:
- If the test is aborted by the user, confirm with [**OK**].
- If the test aborted by the balance, tap [**Retry**].

6.3.3 Protocols

The detail of the record depends on the selected settings.

See Protocol – Definition of adjustment and test reports [▸ 49].

- [**Adj. History**] function key is activated.

1 Adjustments and tests can be displayed by tapping [**Adj. History**].
⇨ An information window opens.

2 Press [🖶] to print.

3 To exit the menu item, tap [**OK**].

6.3.3.1 Adjustment and test records (sample records)

Example: Printout

Internal or FACT adjustment protocol

```
- Internal adjustment --
25.Jul 2014        16:02

METTLER TOLEDO

WeighBridge SNR:
              1234567890
Terminal SNR: 1234567891
Balance ID       Lab A/1

Temperature    21.2 °C

Adjustment done

Signature

.......................
-----------------------
```

Note
No signature line is printed for a FACT adjustment.

External adjustment protocol

```
- External adjustment --
25.Jul 2014        16:12

METTLER TOLEDO

WeighBridge SNR:
              1234567890
Terminal SNR: 1234567891
Balance ID       Lab A/1
Weight ID     ECW-6000/1
Certificate No. MT-414/A
Temperature   20.8 °C
Nominal      200.00 g

Adjustment done

Signature

.......................
-----------------------
```

Internal test protocol

```
---- Internal test -----
25.Jul 2014        16:22

METTLER TOLEDO

WeighBridge SNR:
              1234567890
Terminal SNR: 1234567891
Balance ID       Lab A/1
Temperature    19.8 °C
Nominal    100.0000 %
Actual      99.9981 %
Diff        -0.0019 %

Test done

Signature

.......................
------------------------
```

External test protocol

```
---- External test -----
25.Jul 2014        16:32

METTLER TOLEDO

WeighBridge SNR:
              1234567890
Terminal SNR: 1234567891
Balance ID       Lab A/1
Weight ID      ETW-200/1
Certificate No. MT-806/5
Temperature   20.2 °C
Nominal      200.00 g
Actual       199.90 g
Diff          -0.10 g

Test done

Signature

.......................
------------------------
```

6.4 Working with the test sequence function

Navigation: [⊞] > [**Weighing**]

Define test sequences, test (method) and weight to be used. The user is guided through the test with the display of clear instructions. The test should be carried out according to GWP® or other QM systems.

All parameters and values for the test sequence have been defined and the test sequence assigned to a task. Define tasks - when and how the test sequence will be carried out. If standard is selected under the [**Preparation Instructions**] menu item, preparatory instructions are displayed in the test sequence. These correspond to the typical SOP standard. These instructions must be followed and confirmed with [**OK**] before the rest of the test sequence can be continued.

Note
The extensiveness of the test depends on the settings selected (e.g. **Preparation Instructions**, **Action if Failure**, **AutoZero**).

See Test sequences [▸ 36] and Configuration of test sequence parameters.

On completion of the test, the measurements are printed together with the results.

- A printer is connected and activated as an output device in the peripheral device settings.

- To print out the settings, press [🖶].

A method describes the type of test to be carried out and defines the main purpose of a test sequence. There are 8 different methods available.

6.4.1 Starting a task

A task can be started either automatically or manually depending on the particular settings.

GWP

When a specific day or time is reached, the small GWP icon appears at the top right of the display (below the date and time). This is an indication that the balance requires a task to be performed. An instruction window is simultaneously displayed, which guides the user through the test. These instructions must be followed.

- Test sequence is defined and assigned to a task.

1 Follow the instructions and confirm with [**OK**].

2 Remove all weights and confirm with [**OK**].

3 Level the balance and confirm with [**OK**].

4 Follow further instructions depending on the selected task.

Note
The instruction window is closed and the small GWP icon for the task at the top right of the display extinguishes on successful completion of the test.

Manual test activation

GWP **Test Sequence** A test sequence can be started manually by tapping the function key.

- [**Test Sequence**] function key is activated.
- Test sequence is defined and assigned to a task.

1 Tap [**Test Sequence**].
   ⇨ A selection window with test sequences appears.

2 Tap the test sequence.
   ⇨ An instruction window appears.
   The test sequence was started
   Follow the instructions below:
   1. Clean the weighing pan.
   2. Level the balance.

3. Switch on the printer if necessary.
4. Have the test weights ready.
5. Have the weight tweezers/fork ready.
When all instructions have been followed, confirm with [**OK**] and follow further test sequence instructions.

3 Remove all weights and confirm with [**OK**].

4 Level the balance and confirm with [**OK**].

6.4.1.1 EC - eccentric load test

The purpose of the **EC** method (eccentric load test) is to ensure that every eccentric load deviation is within the necessary user SOP tolerances.

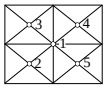

The result corresponds to the highest of the 4 determined eccentric load deviations.

Method

The procedure is as follows:

1 Zero the balance.

2 Place the test weight in the center and confirm with [**OK**].

3 Place the test weight at the front left and confirm with [**OK**].

4 Place the test weight at the rear left and confirm with [**OK**].

5 Place the test weight at the rear right and confirm with [**OK**].

6 Place the test weight at the front right and confirm with [**OK**].

7 Remove all weights and confirm with [**OK**].

8 Zero the balance.
⇨ The test results are displayed together with the results.

9 To exit the menu item, tap [**OK**].

10 To abort, tap [**C**].
⇨ The test is printed out.

6.4.1.2 RP1 - repeatability test

The **RP1** method calculates the mean and standard deviation (Symbol s) of a series of measurements with a single test weight in order to determine the repeatability of the balance.

Method

The procedure is as follows:

1 Zero the balance.

2 Place the test weight on the balance and confirm with [**OK**].

3 Remove the test weight and confirm with [**OK**].

4 Repeat steps 2 and 3.

5 Zero the balance.
⇨ The test results are displayed together with the results.

6 To exit the menu item, tap [**OK**].

7 To abort, tap [**C**].
⇨ The test is printed out.

6.4.1.3 RPT1 - repeatability test with tare weight

The **RPT1** method calculates the mean and standard deviation (Symbol s) of a series of measurements with two test weights in order to determine the repeatability. In contrast to the **RP1** method, a second test weight is used to simulate the use of a tare container.

Method

The procedure is as follows:

1 Zero the balance.

2 Place the tare weight on the balance and confirm with [**OK**].

3 Tare the balance.

4 Place the test weight on the balance and confirm with [**OK**].

5 Remove the test weight and confirm with [**OK**].

6 Repeat steps 4 and 5.

7 Zero the balance.

⇨ The test results are displayed together with the results.

8 To exit the menu item, tap [**OK**].

9 To abort, tap [**C**].

⇨ The test is printed out.

6.4.1.4 SE1 - sensitivity test with one weight

The **SE1** method tests the sensitivity of the balance with one test weight.

Method

The procedure is as follows:

1 Zero the balance.

2 Place the test weight on the balance and confirm with [**OK**].

3 Remove the test weight and confirm with [**OK**].

4 Zero the balance.

⇨ The test results are displayed together with the results.

5 To exit the menu item, tap [**OK**].

6 To abort, tap [**C**].

⇨ The test is printed out.

6.4.1.5 SE2 - sensitivity test with two weights

The **SE2** method tests the sensitivity of the balance with two test weights.

Method

The procedure is as follows:

1 Zero the balance.

2 Place test weight 1 on the balance and confirm with [**OK**].

3 Remove test weight 1 and confirm with [**OK**].

4 Zero the balance.

5 Place test weight 2 on the balance and confirm with [**OK**].

6 Remove test weight 2 and confirm with [**OK**].

7 Zero the balance.
   ⇨ The test results are displayed together with the results.
8 To exit the menu item, tap [**OK**].
9 To abort, tap [**C**].
⇨ The test is printed out.

6.4.1.6 SERVICE - reminder

The **SERVICE** method is more a reminder than a method. It is normally set to perform regular checks of various data (dates) in the background. It is used e.g. as a reminder for the next service date or MinWeigh date. The date is checked on a regular basis and a message appears when the defined task is due. The **SERVICE** method can also be used as early pre-warning.

- [**Test Sequence**] function key is activated.
- Test sequence is defined and assigned to a task.
- Carry out the task.

6.4.1.7 SET1 - sensitivity test with tare and one test weight

The **SET1** method tests the sensitivity of the balance with two test weights. The first test weight is used to simulate a tare container.

Method

The procedure is as follows:

1 Zero the balance.
2 Place the tare weight on the balance and confirm with [**OK**].
3 Tare the balance.
4 Place the test weight on the balance and confirm with [**OK**].
5 Remove the test weight and confirm with [**OK**].
6 Zero the balance.
   ⇨ The test results are displayed together with the results.
7 To exit the menu item, tap [**OK**].
8 To abort, tap [**C**].
⇨ The test is printed out.

6.4.1.8 SET2 - sensitivity test with tare and two test weights

The **SET2** method tests the sensitivity of the balance with three test weights. The first test weight (tare weight) is used to simulate a tare container.

Method

The procedure is as follows:

1 Zero the balance.
2 Place test weight 1 on the balance and confirm with [**OK**].
3 Remove test weight 1 and confirm with [**OK**].
4 Zero the balance.
5 Place the tare weight on the balance and confirm with [**OK**].
6 Tare the balance.
7 Place test weight 2 on the balance and confirm with [**OK**].

8 Remove all weights and confirm with [**OK**].

9 Zero the balance.

⇨ The test results are displayed together with the results.

10 To exit the menu item, tap [**OK**].

11 To abort, tap [**C**].

⇨ The test is printed out.

7 Statistics Application

Navigation: [⊞] > [**Statistics**]

The application allows you to generate and evaluate statistics for a series of weighings. It can handle 1 to 999 values.

The **Statistics** application has the same basic features as the **Weighing** application. However, it includes additional settings and functions for statistical data acquisition and evaluation of a series of weighings.

Only the settings and functions that differ from those of the **Weighing** application are described in detail below.

Selecting the application

1 Press [⊞].

2 Tap the [**Statistics**] icon in the selection window.

⇨ The selected application is active.

⇨ Some of the specific function keys and data fields for statistics are activated by default (factory defaults).

⇨ The two function keys [**Result**] and [**CL Result**] are disabled and are therefore shown differently because there is no statistical data available at this point in time.

⇨ The balance is ready for weighing.

7.1 Settings for the Statistics application

Navigation: [⊞] > [**Statistics**] > [⚙]

Several specific settings are available for statistics. You can use them to adapt the application to your needs.

Most of the setting options are the same as for the **Weighing** application. Only the settings that differ are described below.

The arrow buttons can be used to page forward or back to a menu page.

You can define the following parameters:

Menu item	Explanation	Further information
Function Keys	Define which function keys for statistics are shown at the bottom of the display. These keys enable direct access to specific functions.	**See** Specific function keys for using statistics [▸ 85]
Info Field	Define which information fields for statistics are displayed.	**See** Specific information fields for statistics [▸ 86]
Protocol	Select data to be shown on the weighing protocol.	**See** Specific protocol information for statistics [▸ 87]
Additive Weighing	Activates/deactivates the additive mode (series weighing with automatic taring).	**See** Enable additive mode [▸ 89]

7.1.1 Specific function keys for using statistics

Navigation: [⊞] > [**Statistics**] > [⚙] > **Function Keys**

This menu item allows you to enable the specific function keys listed below for using statistics.

All other function keys are the same as for the **Weighing** application.

The function keys are displayed in the application at the bottom of the display. The numbers define the sequence in the display.

- Activate or deactivate function keys by tapping.

- To redefine the sequence, all function keys must be deactivated and subsequently activated in the required sequence.

▪ Application is activated.

1 Press [⊡].
   ⇨ A window with application-dependent settings appears.

2 Tap **Function Keys** > [**Define**].

3 Select the **Function Keys** which you need.
   ⇨ The function key is automatically numbered.

4 Change the settings and confirm with [**OK**].

The arrow buttons can be used to page forward or back to a menu page.

	Designation	Explanation
	M+	Enters the current value.
	Result	Opens the results window.
	CL Result	Clears the results memory.
	CL Last	Deletes the last saved value.
	Nominal	Defines the desired nominal weight. This also serves as a reference for the tolerances.
	+Tol	Defines the accuracy (tolerance range) for weighing to a nominal weight.
	-Tol	Defines the accuracy (tolerance range) for weighing to a nominal weight.
	Max n	Defines the maximum number of weighings in a series.

Factory setting: [**M+**], [**Result**], [**CL Result**] and [**Display**] activated, in this sequence.

7.1.2 Specific information fields for statistics

Navigation: [⊞] > [**Statistics**] > [⊡] > **Info Field**

This menu item provides the information fields listed below for displaying statistical values.

All other data fields are the same as for the **Weighing** application.

The information fields in the display provide constant information on, e.g. set values, measured results.

- Information fields can be activated or deactivated by tapping.
- To redefine the sequence, all information fields must be deactivated and then activated in the required sequence.

▪ Application is activated.

1 Press [⊡].
   ⇨ A window with application-dependent settings appears.

2 Tap **Info Field** > [**Define**].

3 Select the information fields that you need.
   ⇨ The information field is automatically numbered.

4 Change the settings and confirm with [**OK**].

The arrow buttons can be used to page forward or back to a menu page.

You can define the following parameters:

Values	Explanation
n	Shows the number of weighings that have been made.
x	Shows the average weight of all weighings.
s	Shows the standard deviation as an absolute value.
s.rel	Shows the standard deviation as a percentage.
Sum	Shows the total weight of all individual weighings.
Min	Shows the lowest measured weight of the current series.
Max	Shows the highest measured weight of the current series.
Diff.	Shows the difference between the lowest and the highest weights.
Nominal	This function key displays the nominal weight.
+Tol	This function key displays the entered tolerance for weighing-in to nominal weight.
-Tol	This function key displays the entered tolerance for weighing-in to nominal weight.

Factory setting: n, **x** and **s** activated, in this sequence.

7.1.3 Specific protocol information for statistics

Navigation: [⊞] > [**Statistics**] > [⚙] > **Protocol**

Here you define which data appears in the protocols. This large menu item is divided into three sub-menus. They enable you to make additional settings for the application. The rest of the available protocol data corresponds to the data for the **Weighing** application and is not described here.

The check marked data items are printed in the protocol.

- Information can be activated or deactivated by tapping.

▪ Application is activated.

1 Press [⚙].
   ⇨ A window with application-dependent settings appears.

2 Tap **Protocol** > [**Define**].
   ⇨ **Protocol** window appears.

3 Tap (e.g. **Header**) > [**Define**].

4 Select the information key which you need.

5 Confirm with [**OK**].

The arrow buttons can be used to page forward or back to a menu page.

Note
The results and data can be printed out at any time.

▪ A printer is connected and activated as an output device in the peripheral device settings.

- To print out the settings, press [🖶].

Header line of protocols

Use this sub-menu to define which data is printed in the protocol header (before the results).

The header is printed automatically for series weighings when the first weight value is entered in the statistics by tapping the [**M+**] function key.

However, the header can also be printed separately by tapping the [**Header**] function key.

Recording of single values

This submenu can be used to define the information to be reported for each individual result.

Recording of results

Here you can define which additional data is to be recorded in the results protocol.

The result protocol can be printed by pressing the [🖶] key with the result window.

If a specific number of samples [**Max n**] is defined for a weighing series, the results protocol is automatically printed after the weight of the last sample has been entered in the statistics.

You can define the following parameters:

Parameters	Explanation	Values
Header	Define the information to be printed in the protocol header (before the results). **Max n** = records the defined maximum number of weighings in the series. **Nominal** = records the defined nominal weight. **+Tol** = records the defined tolerances. **-Tol** = records the defined tolerances.	**Blank Line** | **Appl. Name*** | **Date/Time** | **Balance Type** | **SNR** | **Balance ID** | **ID1** | **ID2** | **ID3** | **Max n** | **Nominal** | **+Tol** | **-Tol** | **MW-Method** | **Signature**
Single value	Define the information to be recorded for each single result.	**Header** | **Blank Line** | **ID1** | **ID2** | **ID3** | **Max n** | **Nominal** | **+Tol** | **-Tol** | **MW-Method** | **Tare** | **Net*** | **Gross** | **Info Unit**

Result	Define which statistical data is to be recorded. **n** = records the number of weighed samples. **x** = records the average weight of the total number of samples. The value is recorded with the current display unit. The resolution of the recorded value is ten times higher than the resolution of the measured value with the highest resolution in the series. **s** = records the standard deviation as an absolute value. The value is recorded with the current display unit. The resolution of the recorded value is ten times higher than the resolution of the measured value with the highest resolution in the series. **Note** The value is only recorded if there are at least three values in the statistics. Otherwise a dash is shown instead of a value. **s.rel** = records the relative standard deviation within the series as a percentage. The value is always recorded with a resolution of two decimal places. **Note** The value is only recorded if there are at least three values in the statistics. Otherwise a dash is shown instead of a value. **Min** = Records the lowest measured weight of the current series. The number of decimal places and the unit are the same as those used to display the result when the measured value was entered. **Max** = Records the highest measured weight of the current series. The number of decimal places and the unit are the same as those used to display the result when the measured value was entered. **Diff.** = Records the difference between the highest and lowest measured weights in the current series. The value is recorded with the current display unit. The number of decimal places of the recorded value corresponds to the number of decimal places of the highest or lowest weight with the highest resolution. **Sum** = records the total weight of all saved individual weighings. The value is recorded with the current display unit. The number of decimal places corresponds to the number of decimal places of the measured value with the highest resolution in the series.	**Blank Line** | **Appl. Name** | **Date/Time** | **Balance Type** | **SNR** | **Balance ID** | **ID1** | **ID2** | **ID3** | **Max n** | **Nominal** | **+Tol** | **-Tol** | **MW-Method** | **n*** | **x*** | **s*** | **s.rel*** | **Min*** | **Max*** | **Diff.*** | **Sum*** | **Signature*** | **Dash Line** | **3 Blank Lines***

* Factory setting

7.1.4 Enable additive mode

Navigation: [⊞] > [**Statistics**] > [⚙] > **Additive Weighing**

You can use this menu item to enable or disable additive mode. When additive mode is activated, it is not necessary to remove the samples from the weighing pan during a series of weighings.

1 Press [⚙].

⇨ A window with application-dependent settings opens.

2 Tap the [**On**] button for **Additive Weighing**.

You can define the following parameters:

Parameters	Explanation	Values
Off	Additive mode is disabled.	None
On	Additive mode is enabled. Tap the [**M+**] function key, the balance tare automatically after a weighing result has been entered in the statistics. The next sample can be weighed out without removing the previous sample from the weighing pan.	None

Factory setting: [**Off**].

7.2 Working with the Statistics application

Navigation: [⊞] > [**Statistics**]

This section describes how to use the **Statistics** application. Among other things, you can determine a tare weight, change the resolution of the weighing result or work with identifications.

You are probably already familiar with these options from the **Weighing** application. They are therefore not described again here.

7.2.1 Capturing statistics from a weighing series

For optimal use of the statistical functions, you should have a printer connected to your balance. Otherwise we recommend that you enable the three statistical data fields that are the most important for your application (e.g. **n**, **x** and **Sum**).

- A printer is connected and activated as an output device in the peripheral device settings.

- To print out the settings, press [🖶].

Initial settings

To use statistics, you must enable at least the following three function keys:

M+ - Enable function keys.

Result

CL Result

We also recommend enabling the following two function keys: They allow you to delete incorrect values [**CL Last**] and to define the number of samples to be included in a series of weighings [**Max n**].

CL Last - Enable additional function keys.

Max n

Procedure

Series weighing

If the number of samples to be weighed out for a series is specified, tap the [**Max n**] function key and enter the number of samples (1 to 999). The series is terminated automatically after the last sample has been weighed out. The result window is opened and the result log is printed. This function key is only active when no measurement data is present in the statistics. If you enter 0 (zero) for [**Max n**], the series does not have a defined limit and you can weigh out a maximum of 999 samples.

When working with a weighing container, place the container on the balance and press the [**→T←**] key to tare the balance.

Note
If you start a weighing series with a user-defined weighing unit, the unit cannot be changed until the series of measurements is finished.

See Defining free weighing units [▸ 64].

- Function keys are activated.
- The balance is tared [**→T←**].

1 Tap [**Max n**].
   ⇨ A numeric input window appears.

2 Enter the number and confirm with [**OK**].

3 Load the first sample and tap the [**M+**] function key.
   ⇨ When the weight is stable (the dashes disappear), it is entered in the statistics.
   ⇨ The protocol header and the result (single value) of the current weighing are printed.

4 Remove the first sample.
   If the additive mode is activated, the sample can remain on the weighing pan. The balance is automatically tared after each weight is entered in the statistics.

5 Load further samples in succession. Confirm each weight with the [**M+**].

6 Remove the sample and tare the balance (unnecessary if additive mode is activated).
   ⇨ Each value is automatically recorded after being entered in the statistics.
   ⇨ After the last sample is weighed, the result window is automatically opened and printed.
   ⇨ The result window contains the results of a series of weighings. The information selected for result recording appears.
   If the result window consists of several screen pages, paging between the individual pages can take place with the two arrow keys.

7 Tap [**CL Result**] to end measurement and clear the memory for the next series.
   ⇨ A confirmation window appears.

8 To delete the statistics, confirm with [**OK**].

⇨ The statistics are deleted.

⇨ The function key is inactive and grayed.

Sample weighing

- Function keys are activated.
- The balance is tared [**→T←**].

1 Load the sample and tap the [**M+**] function key.
   ⇨ When the weight is stable (the dashes disappear), it is entered in the statistics.
   ⇨ The protocol header and the result (single value) of the current weighing are printed.

2 Remove the sample.

3 Tap [**Result**].
   ⇨ The result window appears.
   If the result window consists of several screen pages, paging between the individual pages can take place with the two arrow keys.

4 Press [🖶] to print the result protocol.

5 Tap [**OK**] to exit the result window.

6 Tap [**CL Result**] to end measurement and clear the memory for the next series.

⇨ A confirmation window appears.

7 To delete the statistics, confirm with [**OK**].

⇨ The statistics are deleted.

⇨ The function key is inactive and grayed.

Note

An error message is displayed if you tap the [**M+**] function key but no weight change has occurred. This prevents you from accidentally acquiring the sample twice.

If you have mistakenly weighed out an incorrect amount and stored the weighing result, you can use the [**CL Last**] function key to cancel the last value. It is only available if values are already present in the memory; otherwise the key is grayed out and cannot be actuated. The key is disabled after a value is deleted and is not enabled again until the next value has been entered in the statistics.

7.2.2 Weighing out to a nominal value

The **Statistics** application provides additional functions that simplify weighing out samples to a defined nominal value. You can use these functions for individual weighings or for series weighings with statistics.

Initial settings

To enter the nominal weight and the associated tolerance range, enable the function keys listed below. Also enable the data fields with the same names so that the defined values will be displayed.

Nominal	-	Enable function keys.
+Tolerance		
-Tolerance		

Procedure

Important

Ensure that the plausibility limit is greater than the defined tolerance values. Weights that are within the tolerance range but greater than the plausibility limit cannot be entered in the statistics. If necessary, change the plausibility limit for the weight values.

Note

The function keys for entering the nominal weight and the tolerance range are disabled if values are already present in the statistics. In this case, you must clear the statistics with the [**CL Last**] function key before you can define the nominal weight and the tolerance range.

- Function keys are activated.
- Statistics are deleted.

1 Tap the [**Nominal**] function key.

⇨ A numeric input window appears.

2 Enter the required value.
- If a weight corresponding to the nominal weight is already on the balance, it can be directly taken over by tapping the button with the balance icon.
Check the weighing unit to the right of the nominal weight.
A selection of available units can be displayed by tapping the weighing unit.

Note
Units are not converted automatically. When a value is entered in a unit, it is retained, even when the unit is changed.

3 Confirm with [**OK**] to activate the nominal weight.

4 Tap the [**+Tolerance**] and/or [**-Tolerance**] function key.
⇨ A numeric input window appears.

5 Enter the required value.

6 Confirm with [**OK**] to activate the tolerance.
Note
Samples outside the tolerance range are specifically marked with **>T+** or **<T-** when single values are recorded.

⇨ The **SmartTrac** graphic weighing-in aid with tolerance marks to facilitate weighing-in to the nominal weight appears.

⇨ Samples can be roughly weighed until the lower tolerance limit is reached and subsequent additions made up to the nominal weight.

7.2.3 Example protocol with statistical values

The detail of a protocol depends on the selected protocol settings. Only application-specific information is shown in the example printout.

Important information for the interpretation of recorded results

The **x** and **s** values are calculated results that are shown with higher resolution than the individual measured values. The significance of the last decimal place cannot be assured with a relatively small measurement series (fewer than 10 or so measured values) with small weight differences.

Example: Printout

```
------ Statistics ------
25.Jul 2014        16:40
WeighBridge SNR
              1234567890
Terminal SNR  1234567891
Balance ID       Lab A/1
Nominal       24.20 g
+Tol            2.5 %
-Tol            2.5 %
n                 4
x            24.493 g
s             0.357 g
s.rel          1.46 %
Min.          24.18 g
Max.          24.91 g
Diff           0.73 g
Sum           97.97 g

Signature

.......................
```

7.2.4 Formulas used for the calculation of statistical values

Calculation of mean value and standard deviation

Notation

x_i = Individual measured value of a series of n measured values $i = 1..n$

$\bar{x}$ = Mean value and s standard deviation of these measured values

The mean value is given by:

$$\bar{x} = \frac{1}{n}\sum_{i=1}^{n} x_i \qquad (1)$$

The commonly used formula for the calculation of the standard deviation s

$$s = \sqrt{\frac{1}{n-1}\sum\left(x_i - \bar{x}\right)^2} \qquad (2)$$

(2) not suitable for numerical calculation, since in measurements where deviations between single values are very small, the square of the difference (between the single value and mean value) can lead to cancellation. In addition, when using this formula, each single measured value must be stored before the standard deviation can be finally determined.

The following formula is mathematically equivalent, but much more stable numerically. It can be derived by appropriate transformation from (1) and (2):

$$s = \sqrt{\frac{1}{n-1}\left\{\sum_{i=1}^{n} x_i^2 - \frac{1}{n}\left(\sum_{i=1}^{n} x_i\right)^2\right\}}$$

For the calculation of the mean value and standard deviation, only n, Σx_i and Σx_i^2 need to be stored for the use of this formula.

Standard deviation

The numerical stability can be further improved by measured value scaling.

With $\Delta x_i = x_i \quad X_0$ whereby X_0 (depending on the application) is either the first measured value of a series of measurements or the nominal value of a series of measurements, the following is obtained:

$$s = \sqrt{\frac{1}{n-1}\left\{\sum_{i=1}^{n} (\Delta x_i)^2 - \frac{1}{n}\left(\sum_{i=1}^{n} \Delta x_i\right)^2\right\}}$$

Mean value

The mean value is calculated accordingly:

$$\bar{x} = X_0 + \frac{1}{n}\sum_{i=1}^{n} \Delta x_i$$

Relative standard deviation

The relative standard deviation can be calculated using the formula:

$$s_{rel} = \frac{s}{\bar{x}} 100 \qquad \text{percent}$$

Number of digits in the results

The mean and standard deviation are always displayed and printed with one decimal place more than the corresponding single measured values. To be noted for interpretation of the results is that this additional decimal place has no significance for small series of measurements (less than about 10 measured values).

This applies similarly to percentages (e.g. relative standard deviation), which always has two decimal places (e.g. 13.45 percent). The significance of the decimal places depends similarly on the magnitude of the original values!

8 Formulation Application

Navigation: [⊞] > [**Formulation**]

The **Formulation** application can be used for weigh in the components of a Formulation up to a specific nominal weight.

Only the settings and functions that differ from those of the **Weighing** application are described in detail below.

Selecting the application

1 Press [⊞].

2 Tap [**Formulation**].

⇨ The selected application is active.

⇨ Some of the specific formulation function keys and information fields are activated by default (factory defaults).

⇨ Both [**Result**] and [**CL Result**] function keys are inactive and therefore grayed out as no formulation is currently active.

⇨ The balance is ready for formulation.

8.1 Formulation application settings

Navigation: [⊞] > [**Formulation**] > [⚙]

Different specific formulation settings are available. You can use them to adapt the application to your needs. In this application, the **Info Unit** is not available.

Most of the setting options are the same as for the **Weighing** application. Only the settings that differ are described below.

The arrow buttons can be used to page forward or back to a menu page.

You can define the following parameters:

Menu item	Explanation	Further information
Function Keys	Defines the formulation function keys that appear at the bottom of the display. These keys enable direct access to specific functions.	**See** Specific formulation function keys [▸ 96]
Info Field	Defines the formulation information fields to be displayed.	**See** Specific formulation information fields [▸ 97]
Protocol	Selects data to be shown in the weighing protocols.	**See** Specific formulation protocol information [▸ 98]
Identification	Defines identifications.	**See** Specific formulation identifications [▸ 99]

8.1.1 Specific formulation function keys

Navigation: [⊞] > [**Formulation**] > [⚙] > **Function Keys**

This menu item can be used to activate the following specific formulation function keys.

All other function keys are the same as for the **Weighing** application.

- Activate or deactivate function keys by tapping.
- To redefine the sequence, all function keys must be deactivated and subsequently activated in the required sequence.

▪ Application is activated.

1 Press [⊡].
   ⇨ A window with application-dependent settings appears.

2 Tap **Function Keys** > [**Define**].

3 Select the **Function Keys** which you need.
   ⇨ The function key is automatically numbered.

4 Change the settings and confirm with [**OK**].

The arrow buttons can be used to page forward or back to a menu page.

	Designation	Explanation
	M+	Stores the net weight of a weighed component.
	Result	Opens the results window.
	CL Result	Clears the results memory.
	ID	Displays the identification.
	Abs/Diff	Switches the weight display between the weighed quantity (Abs = absolute) and the residual quantity to be weighed, until the nominal weight (Diff = difference) is reached.
	Nominal	Defines the desired nominal weight. This also serves as a reference for the tolerances.
	+Tol	Defines the accuracy (tolerance range) for weighing to a nominal weight.
	-Tol	Defines the accuracy (tolerance range) for weighing to a nominal weight.

Factory setting: [**M+**], [**Result**], [**CL Result**], [**ID**] and [**Display**] activated, in this sequence.

8.1.2 Specific formulation information fields

Navigation: [⊞] > [**Formulation**] > [⊡] > **Info Field**

This menu item contains the following formulation information fields.

All other data fields are the same as for the **Weighing** application.

The information fields in the display provide constant information on, e.g. set values, measured results.

- Information fields can be activated or deactivated by tapping.
- To redefine the sequence, all information fields must be deactivated and then activated in the required sequence.

▪ Application is activated.

1 Press [⊡].
   ⇨ A window with application-dependent settings appears.

2 Tap **Info Field** > [**Define**].

3 Select the information fields that you need.
   ⇨ The information field is automatically numbered.

4 Change the settings and confirm with [**OK**].

The arrow buttons can be used to page forward or back to a menu page.

You can define the following parameters:

Values	Explanation
Comp. Weight	Displays the current component weight.
Nominal	This function key displays the nominal weight.
Net Tot	Displays the total net weight of all weighed components.
+Tol	This function key displays the entered tolerance for weighing-in to nominal weight.
-Tol	This function key displays the entered tolerance for weighing-in to nominal weight.
Comp. Counter	Displays the current component counter reading (consecutive number of current component).
Recipe ID	Displays the identification entered via the [**ID**] function key. **Note** The identification designations **ID1** are set to the factory defaults, but can be changed.
Comp. ID	Displays the identification entered via the [**ID**] function key. **Note** The identification designations **ID2** are set to the factory defaults, but can be changed.
Lot ID	Displays the identification entered via the [**ID**] function key. **Note** The identification designations **ID3** are set to the factory defaults, but can be changed.

Factory setting: Comp. ID (ID2) activated.

8.1.3 Specific formulation protocol information

Navigation: [⊞] > [**Formulation**] > [⚙] > **Protocol**

Here you define which data appears in the protocols. This large menu item is divided into three sub-menus. They enable you to make additional settings for the application. The rest of the available protocol data corresponds to the data for the **Weighing** application and is not described here.

The check marked data items are printed in the protocol.

- Information can be activated or deactivated by tapping.
- ▪ Application is activated.

1 Press [⚙].
   ⇨ A window with application-dependent settings appears.

2 Tap **Protocol** > [**Define**].
   ⇨ **Protocol** window appears.

3 Tap (e.g. **Header**) > [**Define**].

4 Select the information key which you need.
   ⇨ The information key is automatically numbered.

5 Confirm with [**OK**].

The arrow buttons can be used to page forward or back to a menu page.

Note
The results and data can be printed out at any time.

- ▪ A printer is connected and activated as an output device in the peripheral device settings.
- \- To print out the settings, press [🖶].

Header line of protocols

Use this sub-menu to define which data is printed in the protocol header (before the results).

The header is printed automatically when the weight of the first component has been stored during formulation by tapping the [**M+**] function key.

Recording of single values

This submenu can be used to define the information to be reported for each individual result.

Single values are automatically printed during formulation by tapping the [**M+**] function key.

A single value can also be printed separately by pressing the [🖶] key.

Recording of results

Here you can define which additional data is to be recorded in the results protocol.

The result protocol can be printed by pressing the [🖶] button with the result window open or automatically after taking over the last component of a formulation.

You can define the following parameters:

Parameters	Explanation	Values
Header	Define the information to be printed in the protocol header (before the results). **Recipe ID** = records the identification of the current formulation entered via the [**ID**] function key.	**Blank Line** | **Appl. Name*** | **Date/Time** | **SNR** | **Balance ID** | **Recipe ID** | **MW-Method** | **Signature**
Single value	Define the information to be recorded for each single result. **Comp. ID** = records the identification of the current component entered via the [**ID**] function key **ID3**. **Lot ID** = records the identification of the current component entered via the [**ID**] function key **ID2**. **Comp. Counter** = records the current component counter reading (consecutive number of current component). **Net %** = records the weight of the current component in % of the nominal weight. **Diff. %** = records the percentage deviation of the actual weight of the current component from its nominal weight.	**Header** | **Blank Line** | **Recipe ID** | **MW-Method** | **Comp. ID*** | **Lot ID** | **Comp. Counter** | **Nominal** | **+Tol** | **-Tol** | **Tare** | **Net*** | **Gross** | **Net %** | **Diff.** | **Diff. %** |
Result	Define which statistical data is to be recorded. **Nominal Tot** = records the total nominal weight of all components of the current formulation. **Net Tot** = records the total net weight of all weighed components.	**Blank Line** | **Appl. Name** | **Date/Time** | **Balance Type** | **SNR** | **Balance ID** | **Recipe ID*** | **Nominal Tot** | **MW-Method** | **Comp. Counter** | **Net Tot*** | **Signature*** | **Dash Line** | **3 Blank Lines***

* Factory setting

8.1.4 Specific formulation identifications

Navigation: [⊞] > [**Formulation**] > [⚙] > **Identification**

This menu item can be used to activate the 3 identifications available for formulation via the [**ID**] function key. Individual identifications can be deactivated or their designations replaced with specific texts (max. 20 characters). The entered designations also appear as information field designations and are printed in weighing protocols.

1 Press [⚙].
   ⇨ A window with application-dependent settings appears.
2 Tap **Identification** > [**Define**].
   ⇨ **Identification** window appears.
3 Settings can be changed by tapping the associated button.
   ⇨ An alphanumeric input window appears.
4 Enter the designation and confirm with [**OK**].

Note
The following designations are defined by default for the 3 identifications.
You can define the following parameters:

Parameters	Explanation	Values
Recipe ID	Activates/deactivates the ID and designation (max. 20 characters).	**Off** | **On***
Comp. ID	Activates/deactivates the ID and designation (max. 20 characters).	**Off** | **On***
Lot ID	Activates/deactivates the ID and designation (max. 20 characters).	**Off*** | **On**

* Factory setting

8.2 Working with the formulation application

Navigation: [⊞] > [**Formulation**]
This section describes the procedure for working with the application **Formulation** and recording the results.

8.2.1 Initial settings

A printer must be connected to the balance for recording formulations.

- A printer is connected and activated as an output device in the peripheral device settings.

- To print out the settings, press [🖶].

The most important information fields for the application must also be activated (e.g. **Nominal**, **ID1** and **ID2** for the automatic processing of formulations.
For each formulation, at least the three following functions keys must be activated.

M+ - Enable function keys.

Result

CL Result

For specific designations to be assigned to the formulations and components, the function key **ID** must also be activated.

ID - Function key activation.

For weigh your components to within a particular tolerance up to a nominal weight, the following function keys must also be activated. The respective values can be entered via these keys.

Nominal - Enable function keys.

+Tolerance

-Tolerance

The **Abs/Diff** function key should also be activated. This allows the weight display to be switched between an already weighed quantity of a component and the remaining quantity to be weighed.

Abs/Diff - Function key activation.

8.2.2 Formulation

When working with a weighing container, place the container on the balance and press the [→T←] key to tare the balance.

Note

The weight display can be switched between an already weighed component quantity and the remaining quantity to be weighed with the [**Abs/Diff**] function key at any time.

If the remaining quantity display (difference) has been selected with the [**Abs/Diff**] function key prior to entering the nominal weight, the nominal weight is displayed with a negative sign (weighing-in against zero).

- Function keys are activated.
- The balance is tared [→T←].

1 Tap [**ID**].
or
Tap [**CompDB**].
⇨ An alphanumeric input window appears.

2 Enter the designation and confirm with [**OK**].

3 To exit the menu without saving, tap [**C**].

4 Tap the [**Nominal**] function key.
⇨ A numeric input window appears.

5 Enter the required value for the first component.
- If a weight corresponding to the nominal weight is already on the balance, it can be directly taken over by tapping the button with the balance icon.
Check the weighing unit to the right of the nominal weight.
A selection of available units can be displayed by tapping the weighing unit.

6 Confirm with [**OK**] to activate the nominal weight.

7 Tap the [**+Tolerance**] and/or [**-Tolerance**] function key.
⇨ A numeric input window appears.

8 Enter the required value.

9 Confirm with [**OK**] to activate the tolerance.
Note
Samples outside the tolerance range are specifically marked with **>T+** or **<T-** when single values are recorded.
⇨ The **SmartTrac** graphic weighing-in aid with tolerance marks to facilitate weighing-in to the nominal weight appears.

10 Weigh the first component.

11 When the nominal weight is reached or the weight is within the tolerances, tap the [**M+**] function key to store the value.
The weight must be previously verified again as the balance does not check whether the weighed value corresponds to the nominal weight.
   ⇨ The protocol header and the result (single value) of the current component are printed.
   ⇨ The balance is ready for weighing the second component.

12 If a new weighing container is used, the container with the first component must be removed and the balance zeroed [→0←]. Place a new container on the balance and tare the balance [→T←].
If the second component is weighed in the same container, taring is unnecessary.

13 Define the nominal weight and tolerances.

14 Weigh the second component.

15 The result can be stored by tapping the [**M+**] function key.
   ⇨ The determined single value is automatically recorded based on specific requirements.

16 Tap [**Result**]. Only available when values are stored, otherwise the key is grayed and cannot be actuated.
   ⇨ The result window appears.
   The information selected for result recording appears.

17 Press [🖶] to print the formulation.

18 Tap [**OK**] to exit the result window.

19 Tap [**CL Result**] to end the formulation and delete the memory for the next formulation.
   ⇨ A confirmation window appears.

20 Confirm deletion of the formulation with [**OK**].

⇨ The formulation is deleted.

⇨ The function key is inactive and grayed.

Weighing further components

The procedure is the same as for the second component with the same or new weighing container.

8.2.3 Sample protocol of a formulation

The detail of a protocol depends on the selected protocol settings. Only application-specific information is shown in the example printout.

Example: Printout

```
----- Formulation ------
25.Jul 2014        12:40
Recipe ID           IORX
Num. of Comp.          2
Nominal Tot   84.30 g
Comp. ID             UPA
Comp            1/2
Nominal       19.22 g
+Tol           0.38 g
-Tol           0.38 g
 1    N       19.24 g
 1    N       100.1 %
 1 Diff        0.02 g
 1 Diff         0.1 %
Comp. ID             UPB
Comp            2/2
Nominal       65.08 g
+Tol           1.95 g
-Tol           1.95 g
 2    N       65.21 g
 2    N       100.2 %
 2 Diff        0.13 g
 2 Diff         0.2 %
Net Tot       84.45 g

Signature

.......................
```

9 Density Application

Navigation: [⊞] > [**Density**]

The **Density** application is used for determining the density of solids and liquids as well as pasty substances. Each sample can be assigned an identification and the integrated statistics function can be used for statistical evaluation of measurements. Density determination is carried out based on **Archimedes' principle** according to which a body immersed in a fluid undergoes an apparent loss in weight which is equal to the weight of the fluid it displaces.

The hanger opening in the balance can be used for density determination. The optional density kit should be used for determining the density of solids. This includes all necessary accessories and aids for convenient and precise density determination. The density kit is supplied with separate instructions with a description of installation and use. A sinker is additionally required for determining the density of liquids and is available from a METTLER TOLEDO representative.

A gamma sphere is required for determining the density of pasty substances. The names of suppliers can be obtained from an authorized representative.

Note
Refer to the separate instructions supplied with the accessories. These contain useful information for working with these aids and their maintenance and use.

Only the settings and functions that differ from those of the **Weighing** application are described in detail below.

Selecting the application

1 Press [⊞].

2 Tap the [**Density**] icon in the selection window.
   ⇨ The selected application is active.
   ⇨ Some of the specific function keys and information fields for density determination are activated by default (factory defaults).

⇨ The balance is ready for determining the density of solids using the auxiliary liquid, water.

9.1 Density application settings

Navigation: [⊞] > [**Density**] > [⚙]

Various specific settings are available for density determination which can be used for adapting applications to suit specific requirements.

Most of the setting options are the same as for the **Weighing** application. Only the settings that differ are described below.

The arrow buttons can be used to page forward or back to a menu page.

You can define the following parameters:

Menu item	Explanation	Further information
Method	Defines the density determination method.	**See** Selecting the density determination method [▸ 105]
Aux. Liquid	Defines the auxiliary liquid.	**See** Selecting an auxiliary liquid [▸ 105]
Statistics	Activates/deactivates the statistics for the selected method.	**See** Activation or deactivation of statistics [▸ 105]
Result Output Format	Defines how the result of the density determination is calculated and displayed.	**See** Specifications for calculation and result display [▸ 106]
Function Keys	Defines the function keys for density determination to appear at the bottom of the display.	**See** Specific function keys for density determination [▸ 106]

Info Field	Defines the information fields displayed for density determination.	**See** Specific information fields for density determination [▸ 107]
Protocol	Selects information to be shown in the weighing protocols.	**See** Specific protocol information for density determination [▸ 108]

9.1.1 Selecting the density determination method

Navigation: [⊞] > [**Density**] > [⚙] > **Method**

This menu item can be used to define the density determination method.

You can define the following parameters:

Menu item	Explanation	Further information
Solid	Determines the density of non-porous solids using an auxiliary liquid.	**See** Determination of the density of non-porous solids [▸ 110]
Aux. Liquid	Determines the density of liquids using a sinker.	**See** Determination of the density of liquids using a sinker [▸ 111]
Pasty Subst.	Determines the density of pasty substances using a gamma sphere.	**See** Determination of the density of pasty substances using a gamma sphere [▸ 112]

Factory setting: [**Solid**] activated.

9.1.2 Selecting an auxiliary liquid

Navigation: [⊞] > [**Density**] > [⚙] > **Aux. Liquid**

This menu item can be used to define an auxiliary liquid. This setting is only used for determining the density of solids.

You can define the following parameters:

Values	Explanation
Water	The density of distilled water at temperatures from 10.0°C to 30.0°C is stored in the balance.
Ethanol	The density of ethanol at temperatures from 10.0°C to 30.0°C is stored in the balance.
Others	Any auxiliary liquid whose density at the current temperature must be known.

Factory setting: [**Water**] activated.

9.1.3 Activation or deactivation of statistics

Navigation: [⊞] > [**Density**] > [⚙] > **Statistics**

The balance can store specific statistics for each density determination method. When the statistics function is activated, a request is made at the end of each density determination to include the result in the statistics. This menu item can be used to activate or deactivate the statistics function.

Note

To use the statistics, activate both [**Start**] and [**Temp.AL**] function keys.

You can define the following parameters:

Parameters	Explanation	Values
Statistics	Activates/deactivates the statistics function.	**On** | **Off***

* Factory setting

9.1.4 Specifications for calculation and result display

Navigation: [⊞] > [**Density**] > [⚙] > **Result Output Format**

This menu item can be used to define the number of decimal places and unit used for calculation and display of the density determination result and also whether the air buoyancy is to be taken into account in calculation.

You can define the following parameters:

Parameters	Explanation	Values
No. of decimalpoints	Defines the number of decimal places. The density determination result can be displayed and recorded with 1 to 5 decimal places.	**1** | **2** | **3*** | **4** | **5**
Compensation	Defines the correction factor for force calibration. **With** = the density determination result can be corrected by the force calibration correction factor and mean air density. **Without** = no correction takes place. **With/Without** = the corrected and uncorrected result is displayed and recorded.	**With*** | **Without** | **With/Without**
Density Unit	Defines the unit to be used for density determination. **g/cm³** = grams per cm³. **kg/m³** = kilograms per m**kg/m³**. **g/l** = grams per liter.	**g/cm³*** | **kg/m³** | **g/l**

* Factory setting

9.1.5 Specific function keys for density determination

Navigation: [⊞] > [**Density**] > [⚙] > **Function Keys**

This menu item can be used to activate the following specific function keys for density determination.

All other function keys are the same as for the **Weighing** application.

The function keys are displayed in the application at the bottom of the display. The numbers define the sequence in the display.

- Activate or deactivate function keys by tapping.
- To redefine the sequence, all function keys must be deactivated and subsequently activated in the required sequence.

▪ Application is activated.

1 Press [⚙].
   ⇨ A window with application-dependent settings appears.

2 Tap **Function Keys** > [**Define**].

3 Select the **Function Keys** which you need.
   ⇨ The function key is automatically numbered.

4 Change the settings and confirm with [**OK**].

The arrow buttons can be used to page forward or back to a menu page.

	Designation	Explanation
▶	**Start**	Starts density determination.
	Density AL	Defines the density of the auxiliary liquid. Only required for determining the density of solids and if an auxiliary liquid other than water or ethanol is used.

	Temp.AL	Entry of the auxiliary liquid temperature. Only required if distilled water or ethanol is used. For other liquids, the density at the current temperature must always be entered. For methods that do not require the use of an auxiliary liquid, the key for entering the current ambient temperature can be used. This is shown in the protocols.
	Vol.Sinker	Entry of the sinker volume (in cm^3, max. 5 decimal places). Only required for determining the density of liquids using a sinker.
	Vol.G. Sphere	Entry of the gamma sphere volume (in cm^3, max. 5 decimal places). Only required for determining the density of pasty substances using a gamma sphere.
	Result	Displays the statistics for the current density determination method. **Note** This function key only needs to be activated if the statistics function is also activated. If no results are available in the statistics, the key is inactive and cannot be actuated.
	CL Result	Clears the statistics for the current density determination to start a new series of measurements.

Factory setting: [**Start**], [**Temp.AL**] and [**Display**] activated, in this sequence.

9.1.6 Specific information fields for density determination

Navigation: [⊞] > [**Density**] > [⚙] > **Info Field**

This menu item provides the following information fields for density determination.

All other data fields are the same as for the **Weighing** application.

The information fields in the display provide constant information on, e.g. set values, measured results.

- Information fields can be activated or deactivated by tapping.
- To redefine the sequence, all information fields must be deactivated and then activated in the required sequence.

▪ Application is activated.

1 Press [⚙].
   ⇨ A window with application-dependent settings appears.

2 Tap **Info Field** > [**Define**].

3 Select the information fields that you need.
   ⇨ The information field is automatically numbered.

4 Change the settings and confirm with [**OK**].

The arrow buttons can be used to page forward or back to a menu page.

You can define the following parameters:

Values	Explanation
Method	Shows the selected density determination method.
Aux. Liquid	Displays the selected auxiliary liquid (determination of the density of solids).
Temp.AL	Displays the temperature of the auxiliary liquid (distilled water, ethanol) entered via the function key with the same name.

Density AL	Displays the density of the auxiliary liquid. For water or ethanol, is automatically selected from the integrated density tables. For other auxiliary liquids, the density entered via the function key with the same name is displayed.
Vol.Sinker	Displays the sinker volume (determination of the density of liquids using a sinker).
Vol.Gamma	Displays the gamma sphere volume (determination of the density of pasty substances using a gamma sphere).

Factory setting: [**Method**], [**Aux. Liquid**] and [**Temp.AL**] activated in this sequence.

9.1.7 Specific protocol information for density determination

Navigation: [⊞] > [**Density**] > [⚙] > **Protocol**

Here you define which data appears in the protocols. This large menu item is divided into three sub-menus. They enable you to make additional settings for the application. The rest of the available protocol data corresponds to the data for the **Weighing** application and is not described here.

The check marked data items are printed in the protocol.

- Information can be activated or deactivated by tapping.
- ▪ Application is activated.

1 Press [⚙].
   ⇨ A window with application-dependent settings appears.

2 Tap **Protocol** > [**Define**].
   ⇨ **Protocol** window appears.

3 Tap (e.g. **Header**) > [**Define**].

4 Select the information key which you need.
   ⇨ The information key is automatically numbered.

5 Confirm with [**OK**].

The arrow buttons can be used to page forward or back to a menu page.

Note
The results and data can be printed out at any time.

- ▪ A printer is connected and activated as an output device in the peripheral device settings.
- \- To print out the settings, press [🖶].

Header line of protocols

This submenu can be used to define information to be printed in the protocol header (before the results). The header is automatically printed if it has been defined as part of the protocol.

The header is printed automatically when a single value protocol is output.

Recording of single values

This submenu can be used to define the information to be reported for each individual result.

Press [🖶] to print a single value protocol (protocol of a single density determination).

Recording statistics

Press [🖶] to print a statistics protocol. Takes place when the statistics window is open.

You can define the following parameters:

Parameters	Explanation	Values
Header	Define the information to be printed in the protocol header (before the results). **Method** = records the selected density determination method. **Aux. Liquid** = records the selected auxiliary liquid (determination of the density of solids). **Density AL** = records the density of the auxiliary liquid. Entry via the function key with the same name. For water or ethanol, the value selected from the integrated table is recorded. **Temp.AL** = records the temperature of the auxiliary liquid (for water and ethanol) entered via the function key with the same name. **Vol.Sinker** = records the sinker volume (determination of the density of liquids using a sinker) entered via the function key with the same name. **Vol.Gamma** = records the gamma sphere volume (determination of the density of pasty substances using a gamma sphere) entered via the function key with the same name.	**Blank Line** | **Appl. Name*** | **Date/Time** | **Balance Type** | **SNR** | **Balance ID** | **ID1** | **ID2** | **ID3** | **Method** | **Aux. Liquid** | **Density AL** | **Temp.AL** | **Vol.Sinker** | **Vol.Gamma** | **Signature**
Single value	Define the information to be recorded for each single result. **Wgt. in Air** = records the weight of the sample in air (determination of the density of solids). **Wgt. in Liquid** = records the weight of the sample in the auxiliary liquid (determination of the density of solids) or the weight of the sample substance displaced by the sinker or gamma sphere. **Vol.Probe** = records the volume of the sample (calculated by the firmware). **Density** = records the result of the current density determination.	**Blank Line*** | **ID1** | **ID2** | **ID3** | **Method*** | **Aux. Liquid** | **Density AL** | **Temp.AL** | **Vol.Sinker** | **Vol.Gamma** | **Wgt. in Air** | **Wgt. in Liquid** | **Vol.Probe** | **Density*** | **Signature** | **Dash Line** | **3 Blank Lines***
Statistics	Define the statistics to be recorded. **n** = records the number of samples in the current series of measurements. **x** = records the average density of all samples. **s** = records the absolute standard deviation within the current series of measurements. **s.rel** = records the relative standard deviation within the current series of measurements. **Min** = records the lowest determined density within a series of measurements. **Max** = records the highest determined density within a series of measurements. **Diff.** = records the difference between the highest and lowest density within a series of measurements.	**Blank Line** | **Appl. Name** | **Date/Time** | **Balance Type** | **SNR** | **Balance ID** | **ID1** | **ID2** | **ID3** | **Method** | **Aux. Liquid** | **n*** | **x*** | **s*** | **s.rel** | **Min*** | **Max*** | **Diff.** | **Signature*** | **Dash Line*** | **3 Blank Lines***

* Factory setting

9.2 Working with the density application

Navigation: [⊞] > [**Density**]

This section describes working with the **Density** application and the different density determination methods.

9.2.1 Determination of the density of non-porous solids

Navigation: [⊞] > [**Density**] > [⚙] > **Method** > [**Solid**]

For the determination of the density of non-porous solids, the solid is first weighed in air and then in the auxiliary liquid. The difference in weight results in the buoyancy from which the density is calculated by the firmware.

Note

- The hanger opening for weighing below the balance can be used for this purpose.
- When working with the optional density kit, observe the information in the supplied instructions.

Select in the application-specific settings as **Method** [**Solid**]. Define the required auxiliary liquid, e.g. [**Water**].

If an auxiliary liquid other than water or ethanol is used, activate the [**Density AL**] function key and the information field with the same name. Enter the density of the auxiliary liquid at the current temperature by pressing the [**Density AL**] function key (in **g/cm³**, max. 5 decimal places). This is required as density tables are stored in the balance only for water and ethanol. The entered value is displayed in the information field with the same name. The activated [**Temp.AL**] function key and information with the same name are not required for density determination with an auxiliary liquid other than water and ethanol. This function key can be used to enter the current ambient temperature. This is subsequently also printed on the protocols and shows the temperature at which the density was determined.

Activate the appropriate function keys and information fields.

▶	**Start**	- Activate function keys.
°C	**Temp.AL**	
ρ	**Density AL**	

The result of the density determination can be printed with the [🖶] key. The result is stored up to completion of the next density determination with the same method and can be printed again as required.

- ▪ A printer is connected and activated as an output device in the peripheral device settings.
- \- To print out the settings, press [🖶].
- ▪ Function keys are activated.

1 Press [⚙].
   ⇨ A window with application-dependent settings appears.

2 Beside **Method**, tap the associated button.
   ⇨ A selection window with methods appears.

3 Tap [**Solid**].

4 Beside **Aux. Liquid**, tap the associated button.
   ⇨ A selection window appears.

5 Tap, e.g. [**Water**].

6 Tap [**Temp.AL**].
   ⇨ A numeric input window appears.

7 Enter the value (10 °C to 30 °C) and confirm with [**OK**].
   For water and ethanol, density tables for the temperature range 10 °C to 30 °C are stored in the balance.

8 Tap [**Start**].
   ⇨ The balance is automatically tared.
   ⇨ The balance requests that the solid is weighed in air.

9 Place the solid on the balance.
When working with the optional density kit, observe the information in the supplied instructions.
When working with the hanger opening, hang the solid on the hanging device.
⇨ The weight of the solid appears at the bottom left corner of the window.

10 Tap [**OK**] to enter the weight.
⇨ The weighing result is stored.
⇨ The balance requests that the solid is weighed in the auxiliary liquid.

11 Place the solid on the balance.
The solid must be immersed at least 1 cm in the liquid and no air bubbles must be present in the container.
When working with the hanger opening, the container with the auxiliary liquid must be placed below the hanging device.

12 Tap [**OK**] to enter the weight.
⇨ The balance determines the density of the solid.
⇨ The result window with compensated and/or uncompensated value appears.

⇨ Density determination is complete.

9.2.2 Determination of the density of liquids using a sinker

Navigation: [⊞] > [**Density**] > [⚙] > **Method** > [**Liquid**]

For the determination of the density of liquids, a sinker with a known volume is used. The sinker is initially tared in air and then weighed in the liquid whose density is to be determined. The difference in weight results in the buoyancy from which the density is calculated by the firmware.

Note

- The hanger opening for weighing below the balance can be used for this purpose.
- When working with the optional density kit, observe the information in the supplied instructions.

Select in the application-specific settings as **Method** [**Liquid**].

The activated [**Temp.AL**] function key and information field with the same name are not required for this density determination method. This function key can be used to enter the current ambient temperature. This is subsequently printed together with the protocols showing the temperature at which the density was determined.

Activate the appropriate function keys and information fields.

▶	**Start**	- Activate function keys.
V	**Vol.Sinker**	
°C	**Temp.AL**	

The result of the density determination can be printed with the [🖶] key. The result is stored up to completion of the next density determination with the same method and can be printed again as required.

▪ A printer is connected and activated as an output device in the peripheral device settings.

- To print out the settings, press [🖶].

▪ Function keys are activated.

1 Press [⚙].
⇨ A window with application-dependent settings appears.

2 Beside **Method**, tap the associated button.
⇨ A selection window with methods appears.

3 Tap [**Liquid**].

4 Tap [**Vol.Sinker**].
   ⇨ A numeric input window appears.

5 Enter the sinker volume, e.g. 10.00000 cm^3 and confirm with [**OK**].

6 Tap [**Start**].
   ⇨ The balance requests that the sinker is weighed in air.

7 Place the sinker on the balance and confirm with [**OK**].
   When working with the optional density kit, observe the information in the supplied instructions.
   When working with the hanger opening, hang the sinker on the hanging device.
   ⇨ The balance is automatically tared.
   ⇨ The balance requests that the sinker is weighed in the liquid.

8 Pour the liquid into the beaker.
   The sinker must be immersed at least 1 cm in the liquid and no air bubbles must be present in the container.
   When working with the hanger opening, place the container with the liquid below the hanging device.
   ⇨ The buoyancy of the sinker appears with a negative sign at the bottom left corner of the window.

9 Tap [**OK**] to enter the weight.
   ⇨ The weighing result is stored.
   ⇨ The balance requests that the solid is weighed in the auxiliary liquid.

10 Place the solid on the balance.
   The sinker must be immersed at least 1 cm in the liquid and no air bubbles must be present in the container.
   When working with the hanger opening, place the container with the liquid below the hanging device.

11 Tap [**OK**] to enter the weight.
   ⇨ The balance determines the density of the liquid.
   ⇨ The result window with compensated and/or uncompensated value appears.

⇨ Density determination is complete.

9.2.3 Determination of the density of pasty substances using a gamma sphere

Navigation: [⊞] > [**Density**] > [⚙] > **Method** > [**Pasty Subst.**]

For the determination of the density of pasty substances, a gamma sphere with a known volume is normally used. The pasty substance is initially tared without gamma sphere and then weighed with gamma sphere.

Select in the application-specific settings as **Method** [**Pasty Subst.**].

The activated [**Temp.AL**] function key and information field with the same name are not required for this density determination method. This function key can be used to enter the current ambient temperature. This is subsequently printed together with the protocols showing the temperature at which the density was determined.

Activate the appropriate function keys and information fields.

▶	**Start**	- Activate function keys.
	Vol.Gamma	
	Temp.AL	

The result of the density determination can be printed with the [🖶] key. The result is stored up to completion of the next density determination with the same method and can be printed again as required.

- A printer is connected and activated as an output device in the peripheral device settings.

- To print out the settings, press [🖶].

▪ Function keys are activated.

1 Press [⚙].
   ⇨ A window with application-dependent settings appears.

2 Beside **Method**, tap the associated button.
   ⇨ A selection window with methods appears.

3 Tap [**Pasty Subst.**].

4 Tap [**Vol.Gamma**].
   ⇨ A numeric input window appears.

5 Enter the gamma sphere volume, e.g. 10.00000 cm^3 and confirm with [**OK**].

6 Tap [**Start**].
   ⇨ The balance requests that the sample is weighed.

7 Place the sample on the balance (without gamma sphere) and confirm with [**OK**].
   ⇨ The balance is automatically tared.
   ⇨ The sample weight appears at the bottom left corner of the window.
   ⇨ The balance requests that the gamma sphere is immersed in the liquid.

8 Immerse the gamma sphere in the liquid.
   ⇨ The weight of the substance displaced by the gamma sphere appears at the bottom left corner of the window.

9 Tap [**OK**] to enter the weight.
   ⇨ The weight is stored.
   ⇨ The balance determines the density of the pasty substance.
   ⇨ The result window with compensated and/or uncompensated value appears.

⇨ Density determination is complete.

9.2.4 Example protocol of a density determination

The detail of a protocol depends on the selected protocol settings. Only application-specific information is shown in the example printout.

The result protocol can be printed by pressing the [🖶] key with the result window.

Note
The result remains stored up to completion of the next density determination. The result can be printed again by pressing the [🖶] key. This may be necessary if a second copy of a protocol is required or if the printer could not be used due to a lack of paper.

Example: Printout

```
------- Density --------
25.Jul 2014        14:51

Method             Solid
Liquid             Water
Density  AL
           0.99800 g/cm3
Temperature   21.2 °C
Wgt. in Air  21.78 g
Wgt. in Liquid
             16.90 g
Density      4.447 g/cm3
         ===============
Density uncomp.
             4.451 g/cm3
         ===============

Signature

.......................
```

9.3 Using density statistics

Statistics can be provided for each density determination method. Stored are all results (max. 651500) recorded in the statistics during density determination.

Initial settings

The statistics can be used by activating the statistics function and the following function keys.

See Activation or deactivation of statistics [▸ 105].

Note

If there are no values in the statistics, the [**Result**] and [**CL Result**] function keys are inactive and cannot be actuated.

Result - Activate function keys.

CL Result

Entry of values for statistics

If the statistics function is activated, a request is made at the end of each density determination to enter the results in the statistics.

- The statistics function is activated.

- Tap [**Yes**].
  - ⇨ The results are entered in the statistics of the current method.

⇨ Copying of the results is confirmed on the display.

If the results are not to be entered in the statistics, press [**No**]. The results are retained until the next measurement, but are not copied to the statistics.

Statistics display and printing

The density determination method must be selected in order to display or print the associated statistics.

See Selecting the density determination method [▸ 105].

Displayed in the statistics window are the values selected for recording statistics. The statistics protocol can be printed by pressing the [🖶] key with the statistics window open.

- A printer is connected and activated as an output device in the peripheral device settings.

- To print out the settings, press [🖶].

Example: Printout

```
------- Density --------
25.Jul 2014        14:55

Method             Solid
Liquid             Water
With Compensation
n                      5
x           5.5004 g/cm3
s           0.0942 g/cm3
s.rel         1.71 %
Without Compensation
n                      5
x           5.5062 g/cm3
s           0.0944 g/cm3
s.rel         1.72 %
With Compensation
Min          5.423 g/cm3
Max          5.603 g/cm3
Diff.        0.180 g/cm3
Without Compensation
Min          5.429 g/cm3
Max          5.609 g/cm3
Diff.        0.180 g/cm3

Signature

.......................
```

- Function keys are activated.
- The density determination method is selected.
- Values are present in the statistics.

1 Tap [**Result**].
   ⇨ The statistics window with compensated and/or uncompensated values appears.

   ⇨ Only displayed are the values selected for recording statistics.

2 Press [🖶].
   ⇨ The statistics protocol is printed.

3 To exit the menu item, tap [**OK**].

Deleting statistics

To end a series of measurements, press the [**CL Result**] function key. This clears the associated statistics. For security reasons, a request is displayed, which must be confirmed before the statistics are cleared.

Note
The [**CL Result**] function key clears the statistics of the currently selected density determination method. The statistics of other methods are retained. Prior to clearing, it must be ensured that the density determination method, the statistics of which are to be cleared, is selected.

- Function keys are activated.
- The density determination method is selected.

- Values are present in the statistics.

1 Tap [**CL Result**].
   ⇨ A confirmation window appears.

2 To clear the statistics, tap [**Yes**].
   ⇨ The statistics are cleared.

⇨ The function key is inactive and grayed.

9.4 Formulae used to calculate density

The **Density** application is based on the following formulae.

9.4.1 Formulae for determining the density of solids

With compensation for air density

$$\rho = \frac{A}{A-B}(\rho_0 - \rho_L) + \rho_L$$

$$V = \alpha \frac{A - B}{\rho_0 - \rho_L}$$

Without compensation for air density

$$\rho = \frac{A \cdot \rho_0}{A-B}$$

$$V = \frac{A-B}{\rho_0}$$

ρ = Sample density

A = Weight of the sample in air

B = Weight of the sample in the auxiliary liquid

V = Sample volume

ρ_0 = Density of the auxiliary liquid

ρ_L = Air density (0.0012 g/cm^3)

α = Balance correction factor (0.99985), takes into account the buoyancy of the adjustment weight

9.4.2 Formulae for determining the density of liquids and pasty substances

With compensation for air density

$$\rho = \frac{\alpha \bullet P}{V_0} + \rho_L$$

Without compensation for air density

$$\rho = \frac{P}{V_0}$$

ρ = Density of liquid or pasty substance

P = Weight of displaced liquid or pasty substance

V_0 = Sinker or gamma sphere volume

ρ_L = Air density (0.0012 g/cm^3)

α = Balance correction factor (0.99985), takes into account the buoyancy of the adjustment weight

9.5 Density table for distilled water

T/°C	0.0	0.1	0.2	0.3	0.4	0.5	0.6	0.7	0.8	0.9
10.	0.99973	0.99972	0.99971	0.99970	0.99969	0.99968	0.99967	0.99966	0.99965	0.99964
11.	0.99963	0.99962	0.99961	0.99960	0.99959	0.99958	0.99957	0.99956	0.99955	0.99954
12.	0.99953	0.99951	0.99950	0.99949	0.99948	0.99947	0.99946	0.99944	0.99943	0.99942
13.	0.99941	0.99939	0.99938	0.99937	0.99935	0.99934	0.99933	0.99931	0.99930	0.99929
14.	0.99927	0.99926	0.99924	0.99923	0.99922	0.99920	0.99919	0.99917	0.99916	0.99914
15.	0.99913	0.99911	0.99910	0.99908	0.99907	0.99905	0.99904	0.99902	0.99900	0.99899
16.	0.99897	0.99896	0.99894	0.99892	0.99891	0.99889	0.99887	0.99885	0.99884	0.99882
17.	0.99880	0.99879	0.99877	0.99875	0.99873	0.99871	0.99870	0.99868	0.99866	0.99864
18.	0.99862	0.99860	0.99859	0.99857	0.99855	0.99853	0.99851	0.99849	0.99847	0.99845
19.	0.99843	0.99841	0.99839	0.99837	0.99835	0.99833	0.99831	0.99829	0.99827	0.99825
20.	0.99823	0.99821	0.99819	0.99817	0.99815	0.99813	0.99811	0.99808	0.99806	0.99804
21.	0.99802	0.99800	0.99798	0.99795	0.99793	0.99791	0.99789	0.99786	0.99784	0.99782
22.	0.99780	0.99777	0.99775	0.99773	0.99771	0.99768	0.99766	0.99764	0.99761	0.99759
23.	0.99756	0.99754	0.99752	0.99749	0.99747	0.99744	0.99742	0.99740	0.99737	0.99735
24.	0.99732	0.99730	0.99727	0.99725	0.99722	0.99720	0.99717	0.99715	0.99712	0.99710
25.	0.99707	0.99704	0.99702	0.99699	0.99697	0.99694	0.99691	0.99689	0.99686	0.99684
26.	0.99681	0.99678	0.99676	0.99673	0.99670	0.99668	0.99665	0.99662	0.99659	0.99657
27.	0.99654	0.99651	0.99648	0.99646	0.99643	0.99640	0.99637	0.99634	0.99632	0.99629
28.	0.99626	0.99623	0.99620	0.99617	0.99614	0.99612	0.99609	0.99606	0.99603	0.99600
29.	0.99597	0.99594	0.99591	0.99588	0.99585	0.99582	0.99579	0.99576	0.99573	0.99570
30.	0.99567	0.99564	0.99561	0.99558	0.99555	0.99552	0.99549	0.99546	0.99543	0.99540

9.6 Density table for ethanol

T/°C	0.0	0.1	0.2	0.3	0.4	0.5	0.6	0.7	0.8	0.9
10.	0.79784	0.79775	0.79767	0.79758	0.79750	0.79741	0.79733	0.79725	0.79716	0.79708
11.	0.79699	0.79691	0.79682	0.79674	0.79665	0.79657	0.79648	0.79640	0.79631	0.79623
12.	0.79614	0.79606	0.79598	0.79589	0.79581	0.79572	0.79564	0.79555	0.79547	0.79538
13.	0.79530	0.79521	0.79513	0.79504	0.79496	0.79487	0.79479	0.79470	0.79462	0.79453
14.	0.79445	0.79436	0.79428	0.79419	0.79411	0.79402	0.79394	0.79385	0.79377	0.79368
15.	0.79360	0.79352	0.79343	0.79335	0.79326	0.79318	0.79309	0.79301	0.79292	0.79284
16.	0.79275	0.79267	0.79258	0.79250	0.79241	0.79232	0.79224	0.79215	0.79207	0.79198
17.	0.79190	0.79181	0.79173	0.79164	0.79156	0.79147	0.79139	0.79130	0.79122	0.79113
18.	0.79105	0.79096	0.79088	0.79079	0.79071	0.79062	0.79054	0.79045	0.79037	0.79028
19.	0.79020	0.79011	0.79002	0.78994	0.78985	0.78977	0.78968	0.78960	0.78951	0.78943
20.	0.78934	0.78926	0.78917	0.78909	0.78900	0.78892	0.78883	0.78874	0.78866	0.78857
21.	0.78849	0.78840	0.78832	0.78823	0.78815	0.78806	0.78797	0.78789	0.78780	0.78772
22.	0.78763	0.78755	0.78746	0.78738	0.78729	0.78720	0.78712	0.78703	0.78695	0.78686
23.	0.78678	0.78669	0.78660	0.78652	0.78643	0.78635	0.78626	0.78618	0.78609	0.78600
24.	0.78592	0.78583	0.78575	0.78566	0.78558	0.78549	0.78540	0.78532	0.78523	0.78515
25.	0.78506	0.78497	0.78489	0.78480	0.78472	0.78463	0.78454	0.78446	0.78437	0.78429
26.	0.78420	0.78411	0.78403	0.78394	0.78386	0.78377	0.78368	0.78360	0.78351	0.78343
27.	0.78334	0.78325	0.78317	0.78308	0.78299	0.78291	0.78282	0.78274	0.78265	0.78256
28.	0.78248	0.78239	0.78230	0.78222	0.78213	0.78205	0.78196	0.78187	0.78179	0.78170
29.	0.78161	0.78153	0.78144	0.78136	0.78127	0.78118	0.78110	0.78101	0.78092	0.78084
30.	0.78075	0.78066	0.78058	0.78049	0.78040	0.78032	0.78023	0.78014	0.78006	0.77997

10 Percent Weighing Application

Navigation: [⊞] > [**Percentweighing**]

The **Percentweighing** application enables weighing to a predefined weight (100%) and identification of deviations from this nominal weight.

Only the settings and functions that differ from those of the **Weighing** application are described in detail below.

Selecting the application

1 Press [⊞].

2 Tap the [**Percentweighing**] icon in the selection window.

⇨ The selected application is active.

⇨ Some of the specific function keys and information fields for percent weighing are activated by default (factory defaults).

⇨ The balance is ready for weighing.

10.1 Settings for percent weighing application

Navigation: [⊞] > [**Percentweighing**] > [⚙]

Several specific settings are available for percent weighing. You can use them to adapt the application to your needs.

Most of the setting options are the same as for the **Weighing** application. Only the settings that differ are described below.

Unlike the **Weighing** application, no custom unit can be specified. The **MinWeigh** feature is available.

The arrow buttons can be used to page forward or back to a menu page.

You can define the following parameters:

Menu item	Explanation	Further information
Function Keys	Defines the function keys for percent weighing to appear at the bottom of the display. These keys enable direct access to specific functions.	**See** Specific function key for percent weighing [▸ 118]
Info Field	Defines the information fields to be displayed for percent weighing.	**See** Specific information fields for percent weighing [▸ 119]
Display Unit	Defines the unit for result display.	**See** Additional unit for percent weighing [▸ 120]
Info Unit	Defines an additional weighing unit. This is displayed in the respective information field.	**See** Additional unit for percent weighing [▸ 120]
Protocol	Selects information to be displayed in the weighing protocols.	**See** Specific protocol information for percent weighing [▸ 120]

10.1.1 Specific function key for percent weighing

Navigation: [⊞] > [**Percentweighing**] > [⚙] > **Function Keys**

This menu item can be used to activate the following specific function keys for percent weighing.

All other function keys are the same as for the **Weighing** application.

The function keys are displayed in the application at the bottom of the display. The numbers define the sequence in the display.

- Activate or deactivate function keys by tapping.

- To redefine the sequence, all function keys must be deactivated and subsequently activated in the required sequence.

▪ Application is activated.

1 Press [⚙].
   ⇨ A window with application-dependent settings appears.

2 Tap **Function Keys** > [**Define**].

3 Select the **Function Keys** which you need.
   ⇨ The function key is automatically numbered.

4 Change the settings and confirm with [**OK**].

The arrow buttons can be used to page forward or back to a menu page.

	Designation	Explanation
	Set100%	Defines the current weight as a reference (100%).
	Nominal	Defines the desired nominal weight. This also serves as a reference for the tolerances.
	+Tol	Defines the accuracy (tolerances) for percent weighing.
	-Tol	Defines the accuracy (tolerances) for percent weighing.

Factory setting: [**Set100%**] and [**Display**] activated, in this sequence.

10.1.2 Specific information fields for percent weighing

Navigation: [⊞] > [**Percentweighing**] > [⚙] > **Info Field**

This menu item contains the following information fields for percent weighing.

All other data fields are the same as for the **Weighing** application.

The information fields in the display provide constant information on, e.g. set values, measured results.

- Information fields can be activated or deactivated by tapping.
- To redefine the sequence, all information fields must be deactivated and then activated in the required sequence.

▪ Application is activated.

1 Press [⚙].
   ⇨ A window with application-dependent settings appears.

2 Tap **Info Field** > [**Define**].

3 Select the information fields that you need.
   ⇨ The information field is automatically numbered.

4 Change the settings and confirm with [**OK**].

The arrow buttons can be used to page forward or back to a menu page.

You can define the following parameters:

Values	Explanation
Reference%	Displays the reference weight in percent.
Reference	Displays the absolute weight of the reference.
Nominal	This function key displays the nominal weight.
+Tol	This function key displays the entered tolerance for weighing-in to nominal weight.

-Tol	This function key displays the entered tolerance for weighing-in to nominal weight.

Factory setting: Reference% and **Reference** activated in this sequence.

10.1.3 Additional unit for percent weighing

Navigation: [⊞] > [**Percentweighing**] > [⚙] > **Display Unit** or **Info Unit**

The unit **%** (percent) is additionally displayed in the **Display Unit** and **Info Unit** menu items next to the known weighing units. This assumes that a reference has already been determined.

Note
The unit **%** does not need to be explicitly selected for percent weighing as the unit is always switched automatically to **%** when determining the reference. The required unit can subsequently be selected as required.

1 Press [⚙].
   ⇨ A window with application-dependent settings opens.
2 Beside **Display Unit** or **Info Unit**, tap the associated button.
   ⇨ A selection window appears.
3 Change the setting and confirm with [**OK**].

Factory setting: g (Grams) for **Display Unit** and **Info Unit**.

10.1.4 Specific protocol information for percent weighing

Navigation: [⊞] > [**Percentweighing**] > [⚙] > **Protocol**

Here you define which data appears in the protocols. This large menu item is divided into three sub-menus. They enable you to make additional settings for the application. The rest of the available protocol data corresponds to the data for the **Weighing** application and is not described here.

The check marked data items are printed in the protocol.

- Information can be activated or deactivated by tapping.
- Application is activated.

1 Press [⚙].
   ⇨ A window with application-dependent settings appears.
2 Tap **Protocol** > [**Define**].
   ⇨ **Protocol** window appears.
3 Tap (e.g. **Header**) > [**Define**].
4 Select the information key which you need.
5 Confirm with [**OK**].

The arrow buttons can be used to page forward or back to a menu page.

Note
The results and data can be printed out at any time.

- A printer is connected and activated as an output device in the peripheral device settings.
- To print out the settings, press [🖶].

Header line of protocols

Use this sub-menu to define which data is printed in the protocol header (before the results).

The header is automatically printed if defined as part of the weighing protocol (in recording single values submenu).

However, the header can also be printed separately by tapping the [**Header**] function key.

Recording of single values

This submenu can be used to define the information to be reported for each individual result.

Printing takes place by pressing the [🖶] key or automatically if the automatic print function is activated.

Protocol footer

This submenu can be used to define the information to be printed in the protocol footer after the results (single values).

The footer can be printed by tapping the [**Footer**] function key.

You can define the following parameters:

Parameters	Explanation	Values
Header	Define the information to be printed in the protocol header (before the results). **Ref%, Ref.** = records the reference in percent and weight. **Reference** = records the reference as a weight value. **Nominal** = records the defined nominal weight. **+Tol** = records the defined tolerance. **-Tol** = records the defined tolerance.	**Blank Line** | **Appl. Name*** | **Date/Time*** | **Balance Type** | **SNR** | **Balance ID** | **ID1** | **ID2** | **ID3** | **Ref%, Ref.** | **Reference** | **Nominal** | **+Tol** | **-Tol** | **Signature**
Single value	Define the information to be recorded for each single result.	**Header** | **Blank Line** | **ID1** | **ID2** | **ID3** | **Ref%, Ref.** | **Reference** | **Nominal** | **+Tol** | **-Tol** | **Tare** | **Net*** | **Gross** | **Info Unit** | **Footer**
Footer	Define information to be printed in the protocol footer after the results (single values).	**Blank Line** | **Appl. Name** | **Date/Time** | **Balance Type** | **SNR** | **Balance ID** | **ID1** | **ID2** | **ID3** | **Ref%, Ref.** | **Reference** | **Nominal** | **+Tol** | **-Tol** | **Signature*** | **Dash Line** | **3 Blank Lines**

* Factory setting

10.2 Working with the percent weighing application

Navigation: [⊞] > [**Percentweighing**]

This section describes working with the **Percentweighing** application. Among other things, you can determine a tare weight, change the resolution of the weighing result or work with identifications.

You are probably already familiar with these options from the **Weighing** application. They are therefore not described again here.

10.2.1 Simple percent weighing

Initial settings

To perform a percent weighing, the following function key must be activated.

Set100% - Activate function key.

VarRef% - Activate function keys.

Set100%

Determining the reference

Place the reference weight on the weighing pan. If the applied reference weight is to correspond to 100%, press the [**Set100%**] function key. When the weighing result is stable, the determined weight is taken over as a reference. The reference weight (100%) is shown in the result display and information field **Reference %**. The absolute reference weight is displayed in the **Reference** information field.

Performing a percent weighing

The measured single value can be printed out with the [ ] key.

- A printer is connected and activated as an output device in the peripheral device settings.

- To print out the settings, press [ ].

Note
If the weight of the product is to be displayed instead of the percentage, tap the unit [**%**]. Tap the required weighing unit from the selection window.

- Function keys are activated.

1 Place the reference weight on the weighing pan.

2 Tap [**Set100%**].
   ⇨ When the result is stable (horizontal lines disappear), the determined weight is taken as a reference.
   ⇨ The reference weight (100%) is shown in the result display and information field **Reference%**.
   ⇨ The absolute reference weight appears in the **Reference** information field.

3 Place the product on the balance.

4 Press [ ] to print the percent weighing result.

5 Tap [**Footer**] to print the footer.

⇨ Percent weighing is complete.

10.2.2 Percent weighing to a nominal weight

The **Percent** application offers additional functions to facilitate weighing to a defined nominal weight. It is assumed that the reference for percent weighing has already been determined.

Initial settings

To enter the nominal value and the associated tolerance range, activate the function keys listed below. Also activate the data fields with the same names so that the defined values will be displayed.

Nominal - Enable function keys.

+Tolerance

-Tolerance

Procedure

Note
Units are not converted automatically. If a value is entered in a unit, this value is maintained even if the unit is changed.

- Function keys are activated.

1 Tap [**Nominal**].
   ⇨ A numeric input window appears.

2 Enter the required value, e.g. 130%.
   - If a weight corresponding to the nominal weight is already on the balance, it can be directly taken over by tapping the button with the balance icon.
   Check the weighing unit to the right of the nominal weight.
   A selection of available units, including **[%]** (percent) can be displayed by tapping the weighing unit.
   Note
   The unit **[%]** is only available after the reference has been determined.

3 Confirm with [**OK**] to activate the nominal weight.

4 Tap [**+Tolerance**] and/or [**-Tolerance**]
   ⇨ A numeric input window appears.

5 Enter the required value.
   Both tolerances are set to 2.5% by default. Instead of a percentage, an absolute tolerance can also be entered in any unit, e.g. [**%**].

6 Confirm with [**OK**] to activate the tolerance.
   Note
   Percent weighings outside the tolerances are specifically marked with **>T+** or **<T-** when recording single values.

⇨ The **SmartTrac** graphic weighing-in aid with tolerance marks to facilitate weighing-in to the nominal weight appears.

⇨ Products can be roughly weighed until the tolerance is reached and subsequently finely dosed up to the nominal weight.

10.2.3 Sample protocol of a percent weighing

The detail of a protocol depends on the selected protocol settings. Only application-specific information is shown in the example printout.

Example: Printout

```
---- Percentweighing ---
25.Jul 2014        13:51
Reference%   100.00 %
Reference     27.05 g
Nominal         130 %
+Tol           2.50 %
-Tol           2.50 %
             129.06 %

Signature

.......................
```

11 Piece Counting Application

Navigation: [⊞] > [**Piececounting**]

The **Piececounting** application allows you to determine the number of pieces put on the weighing pan. It is advantageous if all pieces are of approximately equal weight, since the unit quantity is determined on the basis of average weight. Various methods can be used to determine the reference unit weight.

Only the settings and functions that differ from those of the **Weighing** application are described in detail below.

Selecting the application

1 Press [⊞].

2 Tap the [**Piececounting**] icon in the selection window.

⇨ The selected application is active.

⇨ Some of the specific function keys and data fields for piece counting are activated by default (factory defaults).

⇨ The balance is ready for piece counting.

11.1 Piece counting application settings

Navigation: [⊞] > [**Piececounting**] > [⚙]

Several specific settings are available for piece counting. You can use them to adapt the application to your needs.

Most of the setting options are the same as for the **Weighing** application. Only the settings that differ are described below.

Unlike the **Weighing** application, no custom unit can be specified. The **MinWeigh** feature is available.

The arrow buttons can be used to page forward or back to a menu page.

You can define the following parameters:

Menu item	Explanation	Further information
FixPcs	Definition of a fixed reference unit quantity.	**See** Defining the fixed reference unit quantity [▸ 124]
Function Keys	Define which function keys for piece counting are shown at the bottom of the display. These keys enable direct access to specific functions.	**See** Specific function keys for piece counting [▸ 125]
Info Field	Define which information fields for piece counting are displayed.	**See** Specific information fields for piece counting [▸ 126]
Display Unit	Define the unit for the result display.	**See** Additional unit for piece counting [▸ 127]
Info Unit	Define an additional weighing unit. This appears in the corresponding data field on the display.	**See** Additional unit for piece counting [▸ 127]
Protocol	Select data to be shown on the weighing protocol.	**See** Specific protocol data for piece counting [▸ 127]

11.1.1 Defining the fixed reference unit quantity

Navigation: [⊞] > [**Piececounting**] > [⚙] > **FixPcs**

Here you define which fixed reference quantity the function key [**FixPcs**] refers to.

When carrying out piece counting, each time the function key [**FixPcs**] is tapped, the weight is divided by the defined, fixed reference unit quantity. This determines the reference unit weight on which the piece counting is based.

Note
The function key [**FixPcs**] is labeled with [**Fix n**], with **n** being the selected number of reference units.
Example: [**Fix 10**].

1 Press [⚙].
   ⇨ A window with application-dependent settings appears.
2 Beside **FixPcs**, tap the associated button.
   ⇨ A numeric input window appears.
3 Change the settings and confirm with [**OK**].

⇨ Function key is labeled with a new reference unit quantity.

Factory setting: [**Fix 10**] PCS.

11.1.2 Specific function keys for piece counting

Navigation: [⊞] > [**Piececounting**] > [⚙] > **Function Keys**

This menu item allows you to activate the specific function keys listed below for piece counting.

All other function keys are the same as for the **Weighing** application.

The function keys are displayed in the application at the bottom of the display. The numbers define the sequence in the display.

- Activate or deactivate function keys by tapping.
- To redefine the sequence, all function keys must be deactivated and subsequently activated in the required sequence.

▪ Application is activated.

1 Press [⚙].
   ⇨ A window with application-dependent settings appears.
2 Tap **Function Keys** > [**Define**].
3 Select the **Function Keys** which you need.
   ⇨ The function key is automatically numbered.
4 Change the settings and confirm with [**OK**].

The arrow buttons can be used to page forward or back to a menu page.

	Designation	Explanation
	FixPcs	Determines the reference unit weight with a defined, fixed number of pieces.
	VarPcs	Selects the reference unit quantity.
	PcsWgt	Enters the known weight of a reference unit.
	M+	Saves the current unit quantity to the memory.
	Result	Opens the results window.
	CL Result	Clears the results memory.
	CL Last	Deletes the last saved value.

	Nominal	Defines the desired nominal unit quantity. This also serves as a reference for the tolerances.
	Abs/Diff	Switches the weight display between the unit quantity already weighed in and the number of units still to be weighed in until the nominal unit quantity is reached.
	+Tol	Defines the accuracy (tolerance range) for piece counting.
	-Tol	Defines the accuracy (tolerance range) for piece counting.
	Max n	Defines the maximum number of piece counts in a series.

Factory setting: [**PcsWgt**], [**FixPcs**], [**VarPcs**] and [**Display**] activated, in this sequence.

11.1.3 Specific information fields for piece counting

Navigation: [⊞] > [**Piececounting**] > [⚙] > **Info Field**

This menu item provides the information fields listed below for piece counting.

All other data fields are the same as for the **Weighing** application.

The information fields in the display provide constant information on, e.g. set values, measured results.

- Information fields can be activated or deactivated by tapping.
- To redefine the sequence, all information fields must be deactivated and then activated in the required sequence.

▪ Application is activated.

1 Press [⚙].
   ⇨ A window with application-dependent settings appears.

2 Tap **Info Field** > [**Define**].

3 Select the information fields that you need.
   ⇨ The information field is automatically numbered.

4 Change the settings and confirm with [**OK**].

The arrow buttons can be used to page forward or back to a menu page.

You can define the following parameters:

Values	Explanation
RefPcs	Shows the selected reference unit quantity.
PcsWgt	Shows the reference unit weight.
n	Shows the number of piece counts carried out in a series.
x	Shows the average unit quantity of all piece counts in a series.
s	Shows the standard deviation as an absolute value.
s.rel	Shows the standard deviation as a percentage.
Sum	Shows the unit quantity of all counts in a series.
>T+	Shows the number of piece counts outside the upper weight tolerance.
<T-	Shows the number of piece counts outside the lower weight tolerance.
Min	Shows the smallest measured unit quantity in a series of piece counts.
Max	Shows the largest measured unit quantity in a series of piece counts.
Diff.	Shows the difference between the smallest and largest unit quantity in a series of piece counts.
Nominal	This function key displays the nominal unit quantity.

+Tol	This function key displays the entered tolerance for piece counting.
-Tol	This function key displays the entered tolerance for piece counting.

Factory setting: PcsWgt and [**RefPcs**] activated, in this sequence.

11.1.4 Additional unit for piece counting

Navigation: [⊞] > [**Piececounting**] > [⚙] > **Display Unit** or **Info Unit**

The **PCS** unit (piece) is also available beside the known weighing units in the **Display Unit** and **Info Unit** menu topics, provided that a reference unit weight has already been determined.

Note
You do not explicitly need to select the **PCS** unit for piece counting, since the display unit is always automatically switched to **PCS** when the reference unit weight is being determined. Afterwards, you can select the desired unit again at any time, unless you have already saved a value to the memory for a series of piece counts. In this case, switching between **PCS** and the other weighing units is only possible after deleting the results.

1 Press [⚙].
   ⇨ A window with application-dependent settings opens.
2 Beside **Display Unit** or **Info Unit**, tap the associated button.
   ⇨ A selection window appears.
3 Change the setting and confirm with [**OK**].

Factory setting: g (Grams) for **Display Unit** and **Info Unit**.

11.1.5 Specific protocol data for piece counting

Navigation: [⊞] > [**Piececounting**] > [⚙] > **Protocol**

Here you define which data appears in the protocols. This large menu item is divided into three sub-menus. They enable you to make additional settings for the application. The rest of the available protocol data corresponds to the data for the **Weighing** application and is not described here.

The check marked data items are printed in the protocol.

- Information can be activated or deactivated by tapping.
- ▪ Application is activated.

1 Press [⚙].
   ⇨ A window with application-dependent settings appears.
2 Tap **Protocol** > [**Define**].
   ⇨ **Protocol** window appears.
3 Tap (e.g. **Header**) > [**Define**].
4 Select the information key which you need.
5 Confirm with [**OK**].

The arrow buttons can be used to page forward or back to a menu page.

Note
The results and data can be printed out at any time.

- ▪ A printer is connected and activated as an output device in the peripheral device settings.
- \- To print out the settings, press [🖶].

Header line of protocols

Use this sub-menu to define which data is printed in the protocol header (before the results).

The header is printed automatically for piece counts when the first count is entered in the statistics by tapping the [**M+**] function key.

However, the header can also be printed separately by tapping the [**Header**] function key.

Recording of single values

This submenu can be used to define the information to be reported for each individual result.

Tap the [**M+**] function key to activate automatic printing of single values during a series of counts.

A single value can also be printed separately by pressing the [🖶] key.

Recording of results

Here you can define which additional data is to be recorded in the results protocol.

The result protocol can be printed by pressing the [🖶] key with the result window.

If a specific number of counts [**Max n**] is defined for a series of piece counts, the results protocol is automatically printed after the weight of the last count has been entered in the statistics.

You can define the following parameters:

Parameters	Explanation	Values
Header	Define the information to be printed in the protocol header (before the results). **Max n** = records the defined maximum number of piece counts in the series. **Nom.,+Tol,-Tol** = records the defined nominal unit quantity and the defined plus and minus tolerances.	**Blank Line** | **Appl. Name*** | **Date/Time** | **Balance Type** | **SNR** | **Balance ID** | **ID1** | **ID2** | **ID3** | **Max n** | **Nom., +Tol,-Tol** | **Signature**
Single value	Define the information to be recorded for each single result. **RefPcs** = records the selected reference unit quantity. **PcsWgt** = records the defined reference unit weight. **NetPcs** = records the measured net unit quantity.	**Header** | **Blank Line** | **ID1*** | **ID2** | **ID3** | **Nom.,+Tol,-Tol** | **RefPcs** | **PcsWgt** | **NetPcs*** | **Tare** | **Net*** | **Gross** | **Info Unit**

Result	Define which statistical data is to be recorded. **>Tol+,<Tol-** = records the number of counts that are outside the tolerance range. **n** = records the number of piece counts carried out in a series. **x** = records the average unit quantity of all counts in a series. **s** = records the standard deviation as an absolute value. **Note** The value is only recorded if there are at least three values in the statistics. Otherwise a dash is shown instead of a value. **s.rel** = records the relative standard deviation within the series as a percentage. The value is always recorded with a resolution of two decimal places. **Note** The value is only recorded if there are at least three values in the statistics. Otherwise a dash is shown instead of a value. **Min,Max,Diff** = **Min** = records the smallest measured unit quantity of the current series. **Max** = records the largest measured unit quantity of the current series. **Diff.** = records the difference between the smallest and largest unit quantity of the current series. **Sum** = records the total value of all saved individual weighings. **SumPcs** = records the total unit quantity of all saved individual counts.	**Blank Line** | **Appl. Name** | **Date/Time** | **Balance Type** | **SNR** | **Balance ID** | **ID1** | **ID2** | **ID3** | **Max n** | **Nom., +Tol,-Tol** | **>Tol +,<Tol-** | **n*** | **x*** | **s*** | **s.rel*** | **Min,Max,Diff*** | **Sum*** | **SumPcs*** | **Signature*** | **Dash Line** | **3 Blank Lines***

* Factory setting

11.2 Working with the Piece Counting application

Navigation: [⊞] > [**Piececounting**]

This section describes how to work with the **Piececounting** application. Among other things, you can determine a tare weight, change the resolution of the weighing result or work with identifications.

You are probably already familiar with these options from the **Weighing** application. They are therefore not described again here.

11.2.1 Simple piece counting

Initial settings

To carry out a simple piece counting, you must activate at least the following three function keys:

FixPcs - Activate function keys.

VarPcs

PcsWgt

Determining the reference

Place the desired number of reference units on the weighing pan. Using these reference units, the balance measures the average piece weight. This serves as a basis for the piece counting.

If the number of reference units placed on the balance corresponds exactly to the number that is programmed for the function key [**FixPcs**], tap it. As soon as the weighing result is stable, the measured average piece weight is accepted as a reference. The average weight of the reference units (the number of decimal points depends on the model) and the reference unit quantity appears in the data fields.

If a different number of reference units is placed on the balance, and it does not correspond to the function key [**FixPcs**], e.g. 32 pieces, tap the function key [**VarPcs**] (variable unit quantity). It appears in the input field in which the number of pieces is typed. After confirming the unit quantity, the balance determines the reference. The average weight of the reference units and the reference unit quantity appear in the data fields.

If the piece weight is known, this can be entered directly. To do this, tap the function key [**PcsWgt**]. A data field appears in which the piece weight is typed in the desired unit. Since the balance does not have to determine a reference for this method, after confirming the piece weight, the result of the piece counting is displayed immediately (number of pieces currently placed on the balance). The entered reference unit weight and the reference unit quantity "**1**" (since you have entered the weight of an individual part) appear in the data fields.

Performing the piece counting

The measured single value can be printed out with the [🖶] key.

- A printer is connected and activated as an output device in the peripheral device settings.

- To print out the settings, press [🖶].

Note
If the weight of the piece on the balance is displayed instead of the unit quantity, tap the [**PCS**] unit. Tap the desired weighing unit from the selection window.

- Function keys are activated.

1 Load the reference units on the weighing pan.

2 Tap, e.g. [**FixPcs**].
   ⇨ The measured average piece weight is saved as the reference.

3 Place the pieces to be counted on the balance and tap the [**M+**] function key.
   ⇨ When the result is stable (the dashes disappear), it is entered in the statistics.
   ⇨ The protocol header and the result (single value) of the current weighing are printed.

4 Tap [**Result**].
   ⇨ The result window appears.
   If the result window consists of several screen pages, paging between the individual pages can take place with the two arrow keys.

5 Press [🖶] to print the result protocol.

6 Tap [**OK**] to exit the result window.

7 Tap [**CL Result**] to end the counting series and delete the memory for the next series.
   ⇨ A confirmation window appears.

8 To delete the statistics, confirm with [**OK**].

⇨ The statistics are deleted.

⇨ The function key is inactive and grayed.

11.2.2 Totalizing and acquiring statistics from piece counts

Initial settings

In order for you to totalize and acquire statistics, you must activate at least the following three function keys:

M+	-	Enable function keys.
Result		
CL Result		

We also recommend activating the following two function keys. They allow you to delete incorrect values [**CL Last**] and to define the number of piece counts to be included in a series [**Max n**].

For optimal use of the statistics functions, a printer should be connected to the balance. If a printer is not connected, the four most important statistics information fields for your application should be activated (e.g. **n**, **x**, **Min** and **Max**).

- A printer is connected and activated as an output device in the peripheral device settings.
- To print out the settings, press [].

Procedure

If the number of piece counts for a series is specified, press the [**Max n**] function key and enter the number of counts (1 to 999). The series is terminated automatically after the last count has been completed. The result window is opened and the result protocol is printed. This function key is only active when no value is present in the statistics. If you enter 0 (zero) for [**Max n**], the series does not have a defined limit and you can statistically record a maximum of 999 piece counts.

When working with a weighing container, place the container on the balance and press the [→T←] key to tare the balance.

Determine the reference with the desired method. Fixed reference unit quantity, variable reference unit quantity or entry of a known piece weight.

- Function keys are activated.
- The balance is tared [→T←].

1 Load the reference units on the weighing pan.

2 Tap, e.g. [**VarPcs**].
   ⇨ A numeric input window appears.

3 Enter the number of reference units and confirm with [**OK**].

4 Place the pieces to be counted on the balance and tap the [**M+**] function key.
   ⇨ When the result is stable (the dashes disappear), it is entered in the statistics.
   ⇨ The protocol header and the result (single value) of the current weighing are printed.

5 Remove the pieces from the first count.

6 Place the pieces for the second count on the balance and tap the [**M+**] function key.

7 Tap [**Result**].
   ⇨ The result window appears.
   If the result window consists of several screen pages, paging between the individual pages can take place with the two arrow keys.

8 Press [] to print the result protocol.

9 Tap [**OK**] to exit the result window.

10 Tap [**CL Result**] to end the counting series and delete the memory for the next series.
   ⇨ A confirmation window appears.

11 To delete the statistics, confirm with [**OK**].

⇨ The statistics are deleted.

⇨ The function key is inactive and grayed.

Note
An error message is displayed if you tap the [**M+**] function key but no weight change has occurred. This prevents you from accidentally acquiring the same result twice.

If you have mistakenly saved an incorrect piece count result, you can use the [**CL Last**] function key to delete it. It is only available if values are already present in the memory; otherwise the key is grayed out and cannot be actuated. The key is deactivated after a result is deleted and is not activated again until the next result has been entered in the statistics.

11.2.3 Counting to a nominal value

The **Piececounting** application provides additional functions that simplify counting to a defined nominal value. You can use these functions for individual counts or for series counts with statistics. It is assumed that the reference for the piece count has already been determined.

Initial settings

To enter the nominal value and the associated tolerance range, activate the function keys listed below. Also activate the data fields with the same names so that the defined values will be displayed.

Nominal - Enable function keys.

+Tolerance

-Tolerance

We also recommend activating the **Abs/Diff** function key. This allows the results display to be switched at any time, between the amount already weighed and the remaining amount still to be weighed until the nominal value is reached.

Abs/Diff - Function key activation.

Procedure

Note
The function keys for entering the nominal value and the tolerance range are deactivated if values are already present in the statistics. In this case, you must clear the statistics with the [**CL Last**] function key before you can define the nominal value and the tolerance range.

The [**PCS**] unit is only available if a reference unit weight has already been determined.

- Function keys are activated.
- Statistics are deleted.

1 Tap the [**Nominal**] function key.
   ⇨ A numeric input window appears.

2 Enter the required value.
   - If a weight corresponding to the nominal weight is already on the balance, it can be directly taken over by tapping the button with the balance icon.
   Check the weighing unit to the right of the nominal weight.
   A selection of available units, including [**PCS**] (pieces) can be displayed by tapping the weighing unit.
   Note
   Units are not converted automatically. When a value is entered in a unit, it is retained, even when the unit is changed.

3 Confirm with [**OK**] to activate the nominal weight.

4 Tap the [**+Tolerance**] and/or [**-Tolerance**] function key.
   ⇨ A numeric input window appears.

5 Enter the required value.
Both tolerances are set to 2.5% by default. Instead of a percentage, an absolute tolerance can be entered in any unit, e.g. [**PCS**].

6 Confirm with [**OK**] to activate the tolerance.
Note
Piece counts outside the tolerance range are specifically marked with **>T+** or **<T-** when single values are recorded.

⇨ The **SmartTrac** graphic weighing-in aid with tolerance marks to facilitate weighing-in to the nominal weight appears.

⇨ Samples can be roughly weighed until the lower tolerance limit is reached and subsequent additions made up to the nominal weight.

11.2.4 Example protocol of a piece count with statistical values

The detail of a protocol depends on the selected protocol settings. Only application-specific information is shown in the example printout.

Note
The values for **x**, **s**, **Min**, **Max**, **Diff.** and **Sum** are displayed in the current display unit; this does not necessarily have to be **PCS** (pieces).

Important information for the interpretation of recorded results

The **x** and **s** values are calculated results that are shown with higher resolution than the individual measured values. The significance of the last decimal place cannot be assured with a relatively small measurement series (fewer than 10 or so measured values) with small weight differences.

Example: Printout

```
---- Piececounting -----
25.Jul 2014        12:40
WeighBridge SNR
              1234567890
Terminal SNR  1234567891
Nominal      110.00 PCS
+Tol              3 PCS
-Tol              1 PCS
Max n             3
 1              110 PCS
NetPcs          110 PCS
RefPcs           10 PCS
PcsWgt        2.314 g
 2              109 PCS
NetPcs          109 PCS
RefPcs           10 PCS
PcsWgt        2.314 g
 3>T            114 PCS
NetPcs          114 PCS
RefPcs           10 PCS
PcsWgt        2.314 g
n                 3
x           111.000 PCS
s             2.600 PCS
s.rel          2.34 %
Min             109 PCS
Max             114 PCS
Diff              5 PCS
Sum          333.00 PCS
SumPcs          333 PCS
>T+               1
<T-               0

Signature

.......................
```

12 Dynamic Weighing Application

Navigation: [⊞] > [**Dynamic**]

The **Dynamic Weighing** application allows you to weighing of unstable weighing samples or weighing under unstable environmental conditions.

The application supports the use of a chip scanner for fast and error-free identification of the measurement results to the individual test animals. You can connect the chip scanner like a barcode reader and configure it in the system settings. In the application-dependent settings you specify how the data from the scanner should be processed.

Only the settings and functions that differ from those of the **Weighing** application are described in detail below.

Selecting the application

1 Press [⊞].

2 Tap the [**Dynamic**] icon in the selection window.

⇨ The selected application is active.

⇨ Some of the specific function keys and information fields for dynamic weighing are activated by default (factory defaults).

⇨ The balance is ready for weighing.

12.1 Dynamic weighing application settings

Navigation: [⊞] > [**Dynamic**] > [⚙]

Several specific settings are available for dynamic weighing. You can use them to adapt the application to your needs.

Most of the setting options are the same as for the **Weighing** application. Only the settings that differ are described below.

In contrast to the **Weighing** application, no free units can be defined. Also, the **MinWeigh** function is not available.

The arrow buttons can be used to page forward or back to a menu page.

You can define the following parameters:

Menu item	Explanation	Further information
Function Keys	Defines the dynamic weighing function keys that appear at the bottom of the display. These keys enable direct access to specific functions.	**See** Specific function keys for dynamic weighing [▸ 136]
Data Acquisition	Adaptation of the application to the weighing object.	**See** Adapting the application to the dynamic behavior of the weighing material [▸ 136]
Start Mode	Defines the start mode for a weighing cycle.	**See** Settings for the start of weighing [▸ 137]
Beep	Activates/deactivates the beep that signals completion of a weighing.	**See** Settings for the beep at the end of the measurement cycle [▸ 137]
AutoTare	Activates/deactivates the automatic tare function.	**See** Settings for the automatic tare function [▸ 138]
Info Field	Defines the dynamic weighing information fields to be displayed.	**See** Specific information fields for dynamic weighing [▸ 138]
Protocol	Selects data to be shown in the weighing protocols.	**See** Specific protocol data for dynamic weighing [▸ 139]

Single Value Print	Activates/deactivates automatic printing of individual weighing results.	**See** Automatic or manual reporting of individual values [▸ 140]
Output channel selection	Selects the destination for the data output (host and/or printer).	**See** Selecting the destination for the output data [▸ 141]
Customise output	Formats the output data.	**See** Formatting the output data [▸ 141]
Statistics	Activates/deactivates the statistics function.	**See** Activate or deactivate statistics [▸ 143]

12.1.1 Specific function keys for dynamic weighing

Navigation: [⊞] > [**Dynamic**] > [⚙] > **Function Keys**

This menu item allows you to activate the specific function keys listed below for dynamic weighing.

All other function keys are the same as for the **Weighing** application.

The function keys are displayed in the application at the bottom of the display. The numbers define the sequence in the display.

- Activate or deactivate function keys by tapping.
- To redefine the sequence, all function keys must be deactivated and subsequently activated in the required sequence.

▪ Application is activated.

1 Press [⚙].
   ⇨ A window with application-dependent settings appears.

2 Tap **Function Keys** > [**Define**].

3 Select the **Function Keys** which you need.
   ⇨ The function key is automatically numbered.

4 Change the settings and confirm with [**OK**].

The arrow buttons can be used to page forward or back to a menu page.

	Designation	Explanation
▶	**Start**	Start a manual weighing cycle. If the **AutoStart** function has been activated, this function key is not required.
	Result	Opens the results window.
	CL Result	Clears the results memory.
	CL Last	Deletes the last saved value.

Factory setting: [**ID**], [**1/10d**] and [**Display**] activated, in this sequence.

12.1.2 Adapting the application to the dynamic behavior of the weighing material

Navigation: [⊞] > [**Dynamic**] > [⚙] > **Data Acquisition**

You can use the settings in the **Data Acquisition** menu to adapt the application to the behavior of the weighing object. Thereby optimize the speed of a result determination.

With the **Dynamic Behavior** setting, the balance determines the release of the weighing result based on your specifications.

Alternatively, the **Time Interval** setting allows you to define a fixed amount of time until the weighing result is released. This can impair accuracy, but it can be practical when the above filter settings result in long measuring times in the case of extremely unstable weighing materials. If you have to conclude your measurements within a certain amount of time.

1 Press [⊡].
   ⇨ A window with application-dependent settings is displayed.

2 Tap **Data Acquisition** and subsequently the associated button.
   ⇨ **Data Acquisition** window is displayed.

3 Change the settings and confirm with [**OK**].

You can define the following parameters:

Parameters	Explanation	Values
Dynamic Behavior	Defines the dynamic behavior. **Stable** = for relatively stable weighing objects. **Standard** = for normal weighing objects. **Unstable** = for unstable weighing objects.	**Stable** | **Standard*** | **Unstable**
Time Interval	Defines the interval time in seconds.	1 … 99 (5)*

* Factory setting

12.1.3 Settings for the start of weighing

Navigation: [⊞] > [**Dynamic**] > [⊡] > **Start Mode**

In the menu item **Start Mode** can you specify how a weighing cycle should be started.

1 Press [⊡].
   ⇨ A window with application-dependent settings is displayed.

2 Tap **Start Mode** and subsequently the associated button.
   ⇨ **Start Mode** window is displayed.

3 Change the settings and confirm with [**OK**].

You can define the following parameters:

Parameters	Explanation	Values
Step proc.	No automatic start. Each measurement cycle must be started manually. The **Start** function key must be active.	None
AutoStart	Automatic start. A measurement cycle is started automatically as soon as the weighing object is placed on the balance which is heavier than the specified minimum weight.	Any (5 g)*
Quick proc.	No automatic start. Each measurement cycle must be started manually. The **Start** function key must be active.	None

* Factory setting

12.1.4 Settings for the beep at the end of the measurement cycle

Navigation: [⊞] > [**Dynamic**] > [⊡] > **Beep**

In the menu item **Beep** you can specify whether a beep should indicate the end of a measurement cycle.

1 Press [⚙].
   ⇨ A window with application-dependent settings is displayed.

2 Tap the [**On**] button for **Beep**.

You can define the following parameters:

Parameters	Explanation	Values
Beep	Activates/deactivates the beep. **On** = as soon as the result of a dynamic weighing is ready, a beep is emitted.	**On*** | **Off**

* Factory setting

12.1.5 Settings for the automatic tare function

Navigation: [⊞] > [**Dynamic**] > [⚙] > **AutoTare**

In this menu item you can specify whether the balance should be automatically reset to zero when required.

1 Press [⚙].
   ⇨ A window with application-dependent settings is displayed.

2 Tap the [**On**] button for **AutoTare**.

You can define the following parameters:

Parameters	Explanation	Values
AutoTare	Activates/deactivates the automatic taring function.	**On*** | **Off**

* Factory setting

12.1.6 Specific information fields for dynamic weighing

Navigation: [⊞] > [**Dynamic**] > [⚙] > **Info Field**

This menu item provides the information fields listed below for displaying dynamic weighing.

All other data fields are the same as for the **Weighing** application.

The information fields in the display provide constant information on, e.g. set values, measured results.

- Information fields can be activated or deactivated by tapping.
- To redefine the sequence, all information fields must be deactivated and then activated in the required sequence.

▪ Application is activated.

1 Press [⚙].
   ⇨ A window with application-dependent settings appears.

2 Tap **Info Field** > [**Define**].

3 Select the information fields that you need.
   ⇨ The information field is automatically numbered.

4 Change the settings and confirm with [**OK**].

The arrow buttons can be used to page forward or back to a menu page.

You can define the following parameters:

Values	Explanation
AutoStart	Shows whether the function is active. If the function has been activated, the associated minimum weight is displayed.
Status	Current status of the application.
n	Shows the number of weighings that have been made.

x	Shows the average weight of all weighings.
s	Shows the standard deviation as an absolute value.
s.rel	Shows the standard deviation as a percentage.
Min	Shows the lowest measured weight of the current series.
Max	Shows the highest measured weight of the current series.
Diff.	Shows the difference between the lowest and the highest weights.
Sum	Shows the total weight of all individual weighings.

Factory setting: AutoStart, **Status** and **ID1** activated in this sequence.

12.1.7 Specific protocol data for dynamic weighing

Navigation: [⊞] > [**Dynamic**] > [⚙] > **Protocol**

Here you define which data appears in the protocols. This large menu item is divided into three sub-menus. They enable you to make additional settings for the application. The rest of the available protocol data corresponds to the data for the **Weighing** application and is not described here.

The check marked data items are printed in the protocol.

- Information can be activated or deactivated by tapping.
- ▪ Application is activated.

1 Press [⚙].
   ⇨ A window with application-dependent settings appears.

2 Tap **Protocol** > [**Define**].
   ⇨ **Protocol** window appears.

3 Tap (e.g. **Header**) > [**Define**].

4 Select the information key which you need.

5 Confirm with [**OK**].

The arrow buttons can be used to page forward or back to a menu page.

Note
The results and data can be printed out at any time.

- ▪ A printer is connected and activated as an output device in the peripheral device settings.
- \- To print out the settings, press [🖶].

Header line of protocols

Use this sub-menu to define which data is printed in the protocol header (before the results).

However, the header can also be printed separately by tapping the [**Header**] function key.

Recording of single values

This submenu can be used to define the information to be reported for each individual result.

A single value can also be printed separately by pressing the [🖶] key.

Protocol footer

This submenu can be used to define the information to be printed in the protocol footer after the results (single values).

The footer can be printed by tapping the [**Footer**] function key.

You can define the following parameters:

Parameters	Explanation	Values
Header	Define the information to be printed in the protocol header (before the results).	**Blank Line** | **Appl. Name*** | **Date/Time*** | **Balance Type** | **SNR** | **Balance ID** | **ID1** | **ID2** | **ID3** | **Signature**
Single value	Define the information to be recorded for each single result. **Sample** = records the net weight value of the current weighing. **Diff. %** = records the deviation from the nominal weight in percent.	**Header** | **Sample*** | **ID1** | **ID2** | **ID3** | **Signature** | **Footer**
Footer	Define information to be printed in the protocol footer after the results (single values). **n** = records the number of weighed samples. **x** = records the average weight of the total number of samples. The value is recorded with the current display unit. The resolution of the recorded value is ten times higher than the resolution of the measured value with the highest resolution in the series. **s** = records the standard deviation as an absolute value. The value is recorded with the current display unit. The resolution of the recorded value is ten times higher than the resolution of the measured value with the highest resolution in the series. **Note** The value is only recorded if there are at least three values in the statistics. Otherwise a dash is shown instead of a value. **s.rel** = records the relative standard deviation within the series as a percentage. The value is always recorded with a resolution of two decimal places. **Note** The value is only recorded if there are at least three values in the statistics. Otherwise a dash is shown instead of a value. **Min,Max,Diff** = **Min** = records the smallest measured unit quantity of the current series. **Max** = records the largest measured unit quantity of the current series. **Diff.** = records the difference between the smallest and largest unit quantity of the current series. **Sum** = records the total value of all saved individual weighings.	**Blank Line** | **Appl. Name** | **Date/Time** | **Balance Type** | **SNR** | **Balance ID** | **ID1** | **ID2** | **ID3** | **n** | **x** | **s** | **s.rel** | **Min,Max,Diff** | **Sum** | **Signature***

* Factory setting

12.1.8 Automatic or manual reporting of individual values

Navigation: [⊞] > [**Dynamic**] > [⚙] > **Single Value Print**

In this menu item you specify whether the individual values should be printed out automatically or manually.

1 Press [⚙].
   ⇨ A window with application-dependent settings is displayed.

2 Tap **Single Value Print** and subsequently the associated button.

3 Change the settings and confirm with [**OK**].

You can define the following parameters:

Parameters	Explanation	Values
Single Value Print	Activates/deactivates the automatic printouts for individual values.	**Manual** | **Automatic***

* Factory setting

12.1.9 Selecting the destination for the output data

Navigation: [⊞] > [**Dynamic**] > [⚙] > **Output channel selection**

In the **Output channel selection** menu item, you can specify the instruments to which the weighing results should be transmitted.

Note

If you selected the **Quick proc.** setting for the start of the weighing, only the weight values that are determined are protocolled on the printer, irrespective of the protocol settings that were selected. In the data output to the host, the settings for formatting the output data are ignored. The values are protocolled in a fixed format, and the ***** symbol is inserted before each value.

1 Press [⚙].

⇨ A window with application-dependent settings is displayed.

2 Tap **Output channel selection** and subsequently the associated button.

3 Change the settings and confirm with [**OK**].

You can define the following parameters:

Parameters	Explanation	Values
Output channel selection	Select the instruments to which the weighing results should be transmitted. **Printer** = data are transmitted to the printer according to the selected protocol settings. **Host** = the data is transferred directly to a connected PC. **Printer + Host** = the data are transmitted both to the printer and to the PC.	**Printer*** | **Host** | **Printer + Host**

* Factory setting

12.1.10 Formatting the output data

Navigation: [⊞] > [**Dynamic**] > [⚙] > **Customise output**

In the **Customise output** menu item, you can specify how the weighing results that are output to the PC should be formatted. This can be necessary if you operate your balance together with other instruments, programs, or peripheral devices that require a particular data format.

1 Press [⚙].

⇨ A window with application-dependent settings is displayed.

2 Tap **Customise output** and subsequently the associated button.

⇨ **Customise output** window is displayed.

3 Change the settings and confirm with [**OK**].

Menu structure

Main menu	Submenu	Further information
Standard	no submenu	
Customise	**DW indicator field**	**See** section DW identifier
	Net indicator field	**See** section Net weight icon
	Weight field	**See** section Weight format
	Unit field	**See** section Weight unit field

Output format

Data output is set by default to a standard format that generally corresponds to the weight displayed at the terminal, followed by an end-of-line character defined for the host. Negative weights are displayed with a minus sign. The output weight is left-justified.

Example (21.45 g)

1	2	3	4	5	6	7	8	9	10	11	12	13	14	15	16	17	18	19	20	21	22	23	24	25	26
				d	**w**		**N**							**2**	**1**	**.**	**4**	**5**		**g**				C_F	L_F

The identifier **dw** indicates that the data record relates to the calculated weight value of a dynamic weighing. **N** stands for a net weight value. The weight value is followed by the end-of-line character that was defined for the host.

1 The output format can be changed by tapping the associated button under **Data output format**.

2 Activate [**Customise**] and subsequently tap the [**Define**] button.

DW identifier

You can define the following parameters:

Parameters	Explanation	Values
DW indicator	DW identifier icon deactivated.	**Off*** | ***** | **dw**
DW indicator field length	Activates the DW identifier icon. Defines the field length (max. 10 characters).	1 … 10 (2 characters)*

* Factory setting

Net weight icon

In the standard output format, net weights are not specially marked. To place an **N** in front of net weights, this function can be activated and also the field length defined. The net symbol is left-justified in the field.

You can define the following parameters:

Parameters	Explanation	Values
Off	Net weight icon deactivated.	None *
Field length	Activates the net weight icon. Defines the field length (max. 10 characters). **Note** If the balance was not tared, the net symbol is not transferred. Blank characters are transferred appropriate to the selected field length.	1 … 10 (5 characters)*

* Factory setting

Weight format

You can define the following parameters:

Parameters	Explanation	Values
Field length	Defines the total length of the weight data field including sign, decimal point and decimal places (max. 20 characters). **Note** Irrespective of their setting, as many places are output as necessary for complete transfer of the weight displayed at the terminal. The weight is output right-justified.	1 … 20 (10)*
No. of decimal digits	Defines the number of decimal places. If the set value has less than the number of decimal places displayed at the terminal, a rounded value with the selected number of decimal places is transferred.	0 … 6 (max. number of places of the balance)*
Sign	Defines the sign. **Always** = each weight is preceded by a plus or minus sign. **Neg. values** = only negative values are preceded by a minus sign. Positive values are transferred without sign.	**Always** | **Neg. values***
Sign position	Defines whether the sign should directly precede the weight (right-justified) or left-justified.	**-xxx.yy*** | **- xxx.yy**

* Factory setting

Weight unit field

In the standard output format, each weight is output with the weight unit (appropriate to the current display unit). This menu can be used to select whether weights are transferred with or without unit and also define the field length for the weight unit.

You can define the following parameters:

Parameters	Explanation	Values
Off	Defines whether weights are transferred with or without unit.	None (Output of weight unit activated)*
Field length	Defines the field length (max. 5 characters). Irrespective of their setting for the field length, as many places are output as necessary for complete transfer of the weight displayed at the terminal. The weight unit is output left-justified (separated from the weight by a space).	1 … 5 (3)*

* Factory setting

12.1.11 Activate or deactivate statistics

Navigation: [⊞] > [**Dynamic**] > [⚙] > **Statistics**

This menu item can be used to activate or deactivate the statistics function.

1 Press [⚙].
   ⇨ A window with application-dependent settings is displayed.

2 Tap **Statistics** > [**On**].

3 Change the settings and confirm with [**OK**].

You can define the following parameters:

Parameters	Explanation	Values
Statistics	Activates/deactivates the statistics function.	**On** | **Off***

* Factory setting

12.2 Working with the Dynamic weighing application

Navigation: [⊞] > [**Dynamic**]

This section describes how to use the **Dynamic** application. Among other things, you can determine a tare weight, change the resolution of the weighing result or use identifiers. To ensure backward compatibility with earlier products, only the weight values that are determined are recorded in the protocol. The values are protocolled in a fixed format and the * symbol is inserted before each value.

You are probably already familiar with these options from the **Weighing** application. They are therefore not described again here.

12.2.1 Dynamic weighing with automatic start

A measurement cycle is started automatically as soon as the weighing object is placed on the balance which is heavier than the specified minimum weight. The purpose of the minimum weight value is to check whether or not there is a weighing object on the balance. If automatic reporting of the individual values is activated, the result of the weighing is printed out automatically. To print out the weighing result manually, press [🖶].

- A printer is connected and activated as an output device in the peripheral device settings.
- To print out the settings, press [🖶].

Note

If the **AutoTare** function is activated, the display is automatically reset to zero after each weighing is completed.

Initial settings

To perform a dynamic weighing with automatic start, you must have activated the **AutoStart** function. The corresponding minimum weight is specified. No special function keys need be activated. Both of the information fields, **AutoStart** and **Status**, are activated at the factory.

If you want to assign an identification to each sample, activate the function key **ID**.

ID	**ID**	- Enable function key.

Performing the weighing

Make sure that the **Status** information field is displaying **Ready**. If it is displaying **Not ready**, wait until the display is stable and the status changes to **Ready**. If **Please Zeroing** is displayed, press the [→0←] key.

When working with a weighing container, place the container on the balance and press the [→T←] key to tare the balance.

If you want to give the weighing object an identification, press the **ID** function key and enter the desired identification.

- Information fields are activated.
- The balance is tared [→T←].
- The **Status** information field is displaying **Ready**.

1 Place the weighing object on the balance. The weighing cycle start automatically.
   ⇨ The result is displayed.
   ⇨ The balance requests that the weight is removed.

2 Remove the weighing object.
   ⇨ The display is automatically set to zero.

⇨ The result of the weighing is printed out automatically.

⇨ The balance is ready for weighing.

12.2.2 Dynamic weighing with manual start

No automatic start: Each measurement cycle must be started manually. If automatic reporting of the individual values is activated, the result of the weighing is printed out automatically. To print out the weighing result manually, press [🖶].

- A printer is connected and activated as an output device in the peripheral device settings.

- To print out the settings, press [🖶].

Initial settings

To perform a dynamic weighing with manual start, you have to activate the **Step proc.** or **Quick proc.** function. The **Start** function key must be activated. Both of the information fields, **AutoStart** and **Status**, are activated at the factory.

To use the manually start, you must enable at least the following function key:

▶	**Start**	- Enable function key.

If you want to assign an identification to each sample, activate the function key **ID**.

ID	**ID**	- Enable additional function key.

Performing the weighing

When working with a weighing container, place the container on the balance and press the [→T←] key to tare the balance.

Step proc.

If the **AutoTare** function is activated, the display is automatically reset to zero after each weighing is completed.

- Information fields are activated.
- The balance is tared [→T←].
- The **Step proc.** function is activated.
- The **Start** function key is activated.

1 Press the **Start** function key.
   ⇨ The display is automatically set to zero.

2 Place the weighing object on the balance and confirm with [**OK**].
   ⇨ The result is displayed.
   ⇨ The balance requests that the weight is removed.

3 Remove the weighing object, confirm with [**OK**].

⇨ The result of the weighing is printed out automatically.

⇨ The balance is ready for weighing.

Quick proc.

- Information fields are activated.
- The balance is tared [→T←].
- The **Quick proc.** function is activated.
- The **Start** function key is activated.

1 Place the weighing object on the balance.

2 Press the **Start** function key.
   ⇨ The result is displayed.
   ⇨ The balance requests that the weight is removed.

3 Remove the weighing object.

⇨ The result of the weighing is printed out automatically.

⇨ The balance is ready for weighing.

12.2.3 Capturing statistics of dynamic weighing

To capturing statistics of dynamic weighing, the **Statistics** function must be activated. If the **Statistics** function activated, all weighing results are automatically transferred to the statistics, up to 999 values. For optimal use of the statistical functions, you should have a printer connected to your balance.

- A printer is connected and activated as an output device in the peripheral device settings.

- To print out the settings, press [▤].

Initial settings

To use statistics, you must enable at least the following three function keys:

Result - Enable function keys.

CL Result

CL Last

Procedure

- Function **Statistics** is activated.
- Function keys are activated.

1 Tap [**Result**].
   ⇨ The result window is displayed.
   If the result window consists of several screen pages, paging between the individual pages can take place with the two arrow keys.

2 Press [▤] to print the result protocol.

3 Tap [**OK**] to exit the result window.

4 Tap [**CL Result**] to end measurement and clear the memory for the next series.
   ⇨ A confirmation window is displayed.

5 To delete the statistics, confirm with [**OK**].

⇨ The statistics are deleted.

⇨ The function key is inactive and grayed.

Note

If an incorrect result is included in the statistics by mistake, you can remove it with the **CL Last** function key. However, you can only remove the last result that was included. After you have removed the incorrect result, the key becomes inactive.

12.2.4 Example protocol of a dynamic weighing

The detail of a protocol depends on the selected protocol settings. Only application-specific information is shown in the example printout.

Important information for the interpretation of recorded results

The **x** and **s** values are calculated results that are shown with higher resolution than the individual measured values. The significance of the last decimal place cannot be assured with a relatively small measurement series (fewer than 10 or so measured values) with small weight differences.

Example: Printout

```
--- Dynamic Weighing ---
25.Jul 2014        17:40
WeighBridge SNR:
              1234567890
Terminal SNR  1234567891

    dw        30.61 g
    dw        31.34 g
    dw        30.65 g
    dw        30.21 g
    dw        31.06 g

n                      5
x            30.774 g
s             0.437 g
s.rel          1.42 %
Min.          30.21 g
Max.          31.34 g
Diff           1.13 g
Sum          153.87 g

Signature

.......................
```

13 Maintenance

13.1 Cleaning

Periodically clean the weighing pan, drip tray/draft shield element (depending on the model), draft shield (depending on the model), housing and terminal of your balance using a damp cloth. The maintenance interval depends on your standard operating procedure (SOP).

Please observe the following notes

⚠ WARNING

Risk of electric shock

a) Disconnect the balance from the power supply prior to cleaning and maintenance.

b) Only use METTLER TOLEDO power cable, if these need to be replaced.

c) Ensure that no liquid comes into contact with the balance, terminal or AC adapter.

d) Do not open the balance, terminal or AC adapter.
These contain no user-serviceable parts.

⚠ CAUTION

Damage of balance

On no account use cleaning agents which contain solvents or abrasive ingredients, as this can result in damage to the terminal overlay.

Cleaning

Your balance is made from high quality, resistant materials and can therefore be cleaned with a commercially available, mild cleaning agent.

1 To thoroughly clean the U-shaped draft shield glass, carefully remove it from the draft shield.

2 Place it on a clean, soft surface, as illustrated in the diagram.

3 When reinserting the glass, ensure that it is in the correct position.

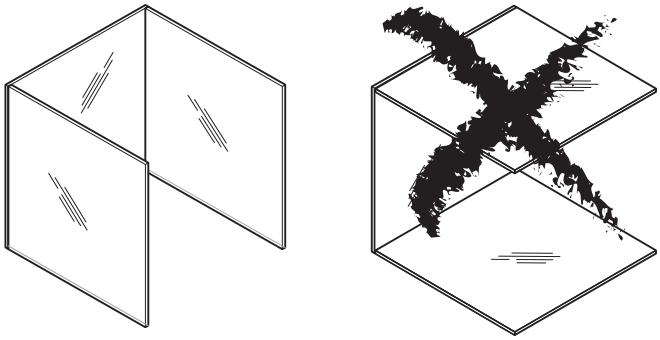

Note

Please contact your METTLER TOLEDO dealer for details of the available service options. Regular servicing by an authorized service engineer ensures constant accuracy for years to come and prolongs the service life of your balance.

13.2 Disposal

In conformance with the European Directive 2002/96/EC on Waste Electrical and Electronic Equipment (WEEE) this device may not be disposed of in domestic waste. This also applies to countries outside the EU, per their specific requirements.

Please dispose of this product in accordance with local regulations at the collecting point specified for electrical and electronic equipment. If you have any questions, please contact the responsible authority or the distributor from which you purchased this device. Should this device be passed on to other parties (for private or professional use), the content of this regulation must also be related.

Thank you for your contribution to environmental protection.

13.3 Firmware (Software) Updates

METTLER TOLEDO is continuously improving its balance firmware (software) for the benefit of customers. So that the customer can benefit quickly and easily from further developments, METTLER TOLEDO makes the latest firmware versions available on the Internet. The firmware made available on the Internet has been developed and tested by Mettler-Toledo AG using processes that meet the guidelines of ISO 9001. Mettler-Toledo AG does not, however, accept liability for consequences that may arise from using the firmware.

13.3.1 How it Works

For important balance information and updates, visit METTLER TOLEDO at:

www.mettler-toledo-support.com

A program called **e-Loader II** will be downloaded together with the firmware update to your computer. This program can be used to transfer the firmware to the balance. Before transferring a firmware update to the balance, all balance settings can be backed up with **e-Loader II**.

If the selected update should include an application not described in these instructions (or one that has been updated in the meantime), the corresponding instructions can also be downloaded in Adobe Acrobat® PDF format.

Note
New applications may not be visible until the type data has been updated by a service engineer.

Requirements

Minimum requirements for downloading applications from the Internet and installing them on the balance are as follows:

- PC with one of the following Microsoft Windows® operating system:
  - Microsoft® Windows® XP Home or Professional with Service Pack 3 (32 bit).
  - Microsoft® Windows Vista® Home Premium, Business, Ultimate or Enterprise with Service Pack 2 (32 bit and 64 bit).
  - Microsoft® Windows 7 with Service Pack 1 Home Premium, Professional, Ultimate or Enterprise (32 bit and 64 bit).
- Internet connection and web browser (e.g. Internet Explorer).
- Connecting cable between PC and balance (e.g. No. 11101051 **see** section Accessories).

13.3.2 Update Procedure

Installing the e-Loader II software downloaded from the Internet on your PC.

1 Establish a connection to the Internet.

2 Visit http://www.mettler-toledo-support.com.

3 Enter the required registration information on the METTLER TOLEDO Balance Support Site.

4 Click on the **Customer Support** link and login.

5 Click on your balance model.

6 Click on the required firmware version and install it.

Transferring the new firmware to the balance

- Start **e-Loader II** and follow the instructions, which will provide a step-by-step guide through the installation.

Important

- Perform a **Master Reset** after the firmware update.

14 Troubleshooting

14.1 Error messages

The majority of error messages are displayed in plain text in the respective application accompanied by remedial instructions. Error messages of this type are self-explanatory and therefore are not mentioned below. The following error messages can be displayed instead of the weighing result.

Error message	Cause	Remedy
Weight display		
┌- - - - - - - ┐	Overload – the applied weight exceeds the weighing capacity of the balance.	- Reduce the sample weight.
└- - - - - - - ┘	**Underload** – sample pan holder is missing.	- Check that the weighing pan is positioned correctly, moves freely and does not scrape against the draft cover.
0.00	**Weight display flashes/Out of zero range** – when one or several range limits are exceeded when the balance is switched on or zeroed. This message is always displayed when a weight is present in the weighing pan when the balance is switched on.	- Remove the weight.
Timeout	**Taring or zeroing was aborted** due to a lack of stability.	1 Close the draft shield doors and check the location (draft, vibrations). 2 Confirm with [**OK**]. 3 Repeat the procedure.

Other error messages

If error messages are displayed other than those described above ("Error x"), contact a METTLER TOLEDO representative.

14.2 Status messages/Status icons

	Cause	Remedy
	Automatic **FACT Adjustment** is currently not possible as the balance is busy.	1 Unload the balance. 2 Do not select any key for 2 minutes. The display stabilizes. ⇨ The status icon extinguishes after successful adjustment.
	The function **CalInfo** is active and an adjustment is required. This indicates that the minimum weight for the current tare was not yet reached.	- The adjustment must be started manually with the internal or external adjustment weight. ⇨ The status icon extinguishes after successful adjustment.
	The balance **battery** must be replaced. This battery ensures that the date and time are retained when the balance is disconnected from the power supply.	- Contact a METTLER TOLEDO representative as soon as possible. ⇨ The battery can be replaced by a service engineer.

	The balance is due for a **service**.	- Contact a METTLER TOLEDO representative as soon as possible. ⇨ The balance can be serviced by a service engineer.
	The next **test for the MinWeigh function** is due.	- Contact a METTLER TOLEDO representative as soon as possible. ⇨ A service engineer will carry out the test as soon as possible.
GWP	A request for automatic performance of a task was defined in the system settings.	- Carry out the task. ⇨ The status icon extinguishes after the task is carried out.

14.3 What to do if....?

Symptom	Possible solution
Display remains dark after switching on	• It must be ensured that the terminal is correctly connected to the balance. • Ensure that the balance is connected to the power supply and switched on. • If the problem persists, contact a METTLER TOLEDO representative.
Keys and buttons do not respond	• Reboot the system by disconnecting and reconnecting it to the power supply. • If the problem persists, contact a METTLER TOLEDO representative.
The connected printer does not print	• Ensure that the printer is switched on and activated in the menu. **See** Peripherals [▸ 51]. • Check the printer settings. **See** Recommended printer settings [▸ 183].
Incorrect characters are printed	• Change the bit/parity settings of the printer and balance to **8/No**. • Check that both devices have the same baud rate setting. **See** Peripherals [▸ 51]. • Use the appropriate character sets. **See** Recommended printer settings [▸ 183].

15 Technical Data

15.1 General data S weighing platform

⚠ CAUTION

Use only with a tested AC Adapter with SELV output current.
Ensure correct polarity ⊖—●—⊕

Power supply

AC adapter:	Primary: 100 – 240 V AC, -15%/+10%, 50/60 Hz Secondary: 12 V DC ±3%, 2.5 A (with electronic overload protection)
Cable for AC adapter:	3-core, with country-specific plug
Balance power supply:	12 V DC ±3%, 2.25 A, maximum ripple: 80 mVpp

Protection and standards

Overvoltage category:	II
Degree of pollution:	2
Protection:	Protected against dust and water
Standards for safety and EMC:	See Declaration of Conformity
Range of application:	For use only in closed interior rooms

Environmental conditions

Height above mean sea level:	Up to 4000 m
Ambient temperature:	5–40 °C
Relative air humidity:	Max. 80% up to 31 °C, linearly decreasing to 50% at 40 °C, noncondensing
Warm-up time:	At least **30** minutes after connecting the balance to the power supply; when switched on from standby-mode, the balance is ready for operation immediately

Materials

Housing:	Die-cast aluminum, lacquered, plastic and chrome steel
Terminal:	Die-cast zinc, chromed and plastics
Weighing pan:	Chrome-nickel steel X2CrNiMo-17-12-2
SmartPan with drip tray	Die-cast zinc, chromed (10 mg models)
Draft shield:	Plastic, chrome steel and glass
Draft shield element:	Die-cast zinc, chromed

15.2 General data L weighing platform

Power supply

Power supply:	100 – 240 V AC, -15%/+10%, 50/60 Hz, 0.4 A
Power cable:	3-core, with country-specific plug

Protection and standards

Overvoltage category:	II
Degree of pollution:	2

Protection:	Protected against dust and water
Standards for safety and EMC:	See Declaration of Conformity
Range of application:	For use only in closed interior rooms

Environmental conditions

Height above mean sea level:	Up to 4000 m
Ambient temperature:	5–40 °C
Relative air humidity:	Max. 80% up to 31 °C, linearly decreasing to 50% at 40 °C, noncondensing
Warm-up time:	At least **30** minutes after connecting the balance to the power supply; when switched on from standby-mode, the balance is ready for operation immediately

Materials

Housing:	Sheet aluminum, die cast, lacquered, plastic and chrome steel
Terminal:	Die-cast zinc, chromed and plastics
Weighing pan:	Chrome-nickel steel X5CrNi18-10
SmartPan with drip tray	Die-cast zinc, chromed (10 mg models)

15.3 Explanatory notes for the METTLER TOLEDO AC adapter

The certified external power supply which conforms to the requirements for Class II double insulated equipment is not provided with a protective earth connection but with a functional earth connection for EMC purposes. This earth connection IS NOT a safety feature. Further information about conformance of our products can be found in the brochure "Declaration of Conformity" which is coming with each product.

In case of testing with regard to the European Directive 2001/95/EC the power supply and the balance have to be handled as Class II double insulated equipment.

Consequently an earth bonding test is not required. Similarly it is not necessary to carry out an earth bonding test between the supply earth conductor and any exposed metalwork on the balance.

Because the balance are sensitive to static charges a leakage resistor, typically 10 kΩ, is connected between the earth connector and the power supply output terminals. The arrangement is shown in the equivalent circuit diagram. This resistor is not part of the electrical safety arrangement and does not require testing at regular intervals.

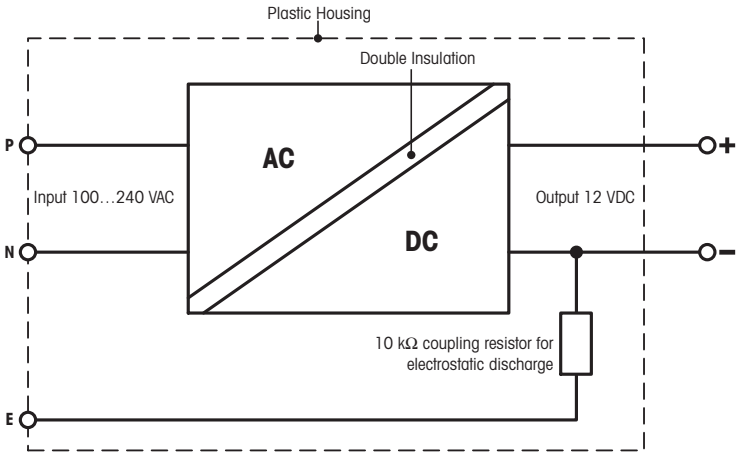

2: Equivalent circuit diagram

15.4 Model-specific data

15.4.1 Balances with readability of 1 mg, S platform with draft shield and SmartPan

		XS303S	XS603S	XS1203S
Limit values				
Maximum capacity		310 g	610 g	1210 g
Readability		1 mg	1 mg	1 mg
Tare range (from…to)		0 … 310 g	0 … 610 g	0 … 1210 g
Maximum capacity in fine range		–	–	–
Readability in fine range		–	–	–
Repeatability (at nominal load) *	sd	0.9 mg (100 g)	0.9 mg (200 g)	0.8 mg (500 g)
Repeatability in fine range (at nominal load) *	sd	–	–	–
Linearity deviation		2 mg (50 g)	2 mg (200 g)	2 mg (200 g)
Eccentricity deviation (test load) [1]		3 mg (100 g)	3 mg (200 g)	3 mg (500 g)
Sensitivity offset (test weight)		6 mg (300 g)	4.5 mg (600 g)	6 mg (1200 g)
Sensitivity temperature drift [2]		0.0005%/°C	0.0002%/°C	0.0002%/°C
Sensitivity stability [3]		0.0025%/a	0.001%/a	0.001%/a
Typical values				
Repeatability *	sd	0.8 mg	0.8 mg	0.4 mg
Repeatability in fine range *	sd	–	–	–
Linearity deviation		0.6 mg	0.6 mg	6 mg
Eccentricity deviation (test load) [1]		1 mg (100 g)	1 mg (200 g)	1 mg (500 g)
Sensitivity offset (test weight)		1.2 mg (300 g)	1.5 mg (600 g)	1.44 mg (1200 g)
Minimum weight (according to USP) *		1 g	1 g	820 mg
Minimum weight (according to USP) in fine range *		–	–	–
Minimum weight (U=1%, k=2) *		100 mg	100 mg	82 mg
Minimum weight (U=1%, k=2) in fine range *		–	–	–
Settling time *		1.5 s	1.5 s	1.5 s
Settling time in fine range *		–	–	–
Interface update rate		23 1/s	23 1/s	23 1/s
Usable height of draft shield		175 mm	175 mm	175 mm
Weight of balance		8.2 kg	8.2 kg	8.3 kg
Dimensions				
Balance dimensions (W × D × H)		194 × 366 × 276 mm	194 × 366 × 276 mm	194 × 366 × 276 mm
Weighing pan dimensions		127 × 127 mm (W × D)	127 × 127 mm (W × D)	127 × 127 mm (W × D)
Weights for routine testing				
OIML CarePac		#11123001	#11123007	#11123008
Weights		200 g F2, 10 g F1	500 g F2, 20 g F1	1000 g F2, 50 g F1
ASTM CarePac		#11123101	#11123107	#11123108
Weights		200 g 1, 10 g 1	500 g 1, 20 g 1	1000 g 1, 50 g 1

* = values obtained with standard weighing pan. This value can be reduced by up to 30% when using only the SmartPan in normal or moderate airflow conditions.

sd = Standard deviation

[1] According to OIML R76

[2] In the temperature range 10 … 30 °C

[3] After putting into operation for the first time, with the self-adjustment function activated (ProFACT or FACT)

15.4.2 Balances with readability of 1 mg, S platform with SmartPan

		XS303SN	XS603SN
Limit values			
Maximum capacity		310 g	610 g
Readability		1 mg	1 mg
Tare range (from…to)		0 … 310 g	0 … 610 g
Maximum capacity in fine range		–	–
Readability in fine range		–	–
Repeatability (at nominal load)	sd	0.9 mg (100 g)	0.9 mg (200 g)
Repeatability in fine range (at nominal load)	sd	–	–
Linearity deviation		2 mg (50 g)	2 mg (200 g)
Eccentricity deviation (test load) [1]		3 mg (100 g)	3 mg (200 g)
Sensitivity offset (test weight)		6 mg (300 g)	4.5 mg (600 g)
Sensitivity temperature drift [2]		0.0005%/°C	0.0002%/°C
Sensitivity stability [3]		0.0025%/a	0.001%/a
Typical values			
Repeatability	sd	0.8 mg	0.8 mg
Repeatability in fine range	sd	–	–
Linearity deviation		0.6 mg	0.6 mg
Eccentricity deviation (test load) [1]		1 mg (100 g)	1 mg (200 g)
Sensitivity offset (test weight)		1.2 mg (300 g)	1.5 mg (600 g)
Minimum weight (according to USP)		1 g	1 g
Minimum weight (according to USP) in fine range		–	–
Minimum weight (U=1%, k=2)		100 mg	100 mg
Minimum weight (U=1%, k=2) in fine range		–	–
Settling time		1.5 s	1.5 s
Settling time in fine range		–	–
Interface update rate		23 1/s	23 1/s
Usable height of draft shield		175 mm	175 mm
Weight of balance		5.6 kg	5.6 kg
Dimensions			
Balance dimensions (W × D × H)		195 × 366 × 97 mm	195 × 366 × 97 mm
Weighing pan dimensions		127 × 127 mm (W × D)	127 × 127 mm (W × D)
Weights for routine testing			
OIML CarePac Weights		#11123001 200 g F2, 10 g F1	#11123007 500 g F2, 20 g F1
ASTM CarePac Weights		#11123101 200 g 1, 10 g 1	#11123107 500 g 1, 20 g 1

sd = Standard deviation

[1] According to OIML R76

[2] In the temperature range 10 … 30 °C

[3] After putting into operation for the first time, with the self-adjustment function activated (ProFACT or FACT)

15.4.3 Balances with readability of 10 mg, S platform with SmartPan

		XS1202S	XS2002S	XS4002S
Limit values				
Maximum capacity		1210 g	2.1 kg	4.1 kg
Readability		10 mg	10 mg	10 mg
Tare range (from…to)		0 … 1210 g	0 … 2.1 kg	0 … 4100 g
Maximum capacity in fine range		–	–	–
Readability in fine range		–	–	–
Repeatability (at nominal load)	sd	8 mg (500 g)	8 mg (1000 g)	8 mg (2 kg)
Repeatability in fine range (at nominal load)	sd	–	–	–
Linearity deviation		20 mg (200 g)	20 mg (500 g)	20 mg (1000 g)
Eccentricity deviation (test load) [1]		20 mg (500 g)	30 mg (1000 g)	30 mg (2 kg)
Sensitivity offset (test weight)		60 mg (1200 g)	60 mg (2 kg)	50 mg (4 kg)
Sensitivity temperature drift [2]		0.0003%/°C	0.0003%/°C	0.0003%/°C
Sensitivity stability [3]		0.0025%/a	0.0025%/a	0.0015%/a
Typical values				
Repeatability	sd	4 mg	4 mg	4 mg
Repeatability in fine range	sd	–	–	–
Linearity deviation		6 mg	6 mg	6 mg
Eccentricity deviation (test load) [1]		6 mg (500 g)	10 mg (1000 g)	10 mg (2 kg)
Sensitivity offset (test weight)		24 mg (1200 g)	32 mg (2 kg)	32 mg (4 kg)
Minimum weight (according to USP)		8.2 g	8.2 g	8.2 g
Minimum weight (according to USP) in fine range		–	–	–
Minimum weight (U=1%, k=2)		820 mg	820 mg	820 mg
Minimum weight (U=1%, k=2) in fine range		–	–	–
Settling time		1.2 s	1.2 s	1.2 s
Settling time in fine range		–	–	–
Interface update rate		23 1/s	23 1/s	23 1/s
Usable height of draft shield		–	–	–
Weight of balance		6.6 kg	6.9 kg	6.9 kg
Dimensions				
Balance dimensions (W × D × H)		195 × 367 × 97 mm	195 × 367 × 97 mm	195 × 367 × 97 mm
Weighing pan dimensions		172 × 205 mm (W × D)	172 × 205 mm (W × D)	172 × 205 mm (W × D)
Weights for routine testing				
OIML CarePac		#11123008	#11123009	#11123010
Weights		1000 g F2, 50 g F2	2000 g F2, 100 g F2	2000 g F2, 200 g F2
ASTM CarePac		#11123108	#11123109	#11123110
Weights		1000 g 1, 50 g 1	2000 g 1, 100 g 1	2000 g 4, 200 g 4

sd = Standard deviation

[1] According to OIML R76

[2] In the temperature range 10 … 30 °C

[3] After putting into operation for the first time, with the self-adjustment function activated (ProFACT or FACT)

		XS6002SDR	XS6002S	XS10002S
Limit values				
Maximum capacity		6.1 kg	6.1 kg	10.1 kg
Readability		100 mg	10 mg	10 mg
Tare range (from…to)		0 … 6.1 kg	0 … 6.1 kg	0 … 10.1 kg
Maximum capacity in fine range		1200 g	–	–
Readability in fine range		10 mg	–	–
Repeatability (at nominal load)	sd	60 mg (2 kg)	8 mg (2 kg)	8 mg (5 kg)

		XS6002SDR	XS6002S	XS10002S
Repeatability in fine range (at nominal load)	sd	8 mg (1000 g)	–	–
Linearity deviation		60 mg (2 kg)	20 mg (2 kg)	20 mg (2 kg)
Eccentricity deviation (test load) [1]		100 mg (2 kg)	30 mg (2 kg)	40 mg (5 kg)
Sensitivity offset (test weight)		150 mg (6 kg)	60 mg (6 kg)	50 mg (10 kg)
Sensitivity temperature drift [2]		0.0003%/°C	0.0003%/°C	0.00025%/°C
Sensitivity stability [3]		0.0015%/a	0.0015%/a	0.0015%/a
Typical values				
Repeatability	sd	40 mg	4 mg	5 mg
Repeatability in fine range	sd	4 mg	–	–
Linearity deviation		19 mg	6 mg	6 mg
Eccentricity deviation (test load) [1]		32 mg (2 kg)	10 mg (2 kg)	12 mg (5 kg)
Sensitivity offset (test weight)		140 mg (6 kg)	30 mg (6 kg)	12 mg (10 kg)
Minimum weight (according to USP)		82 g	8.2 g	10 g
Minimum weight (according to USP) in fine range		8.2 g	–	–
Minimum weight (U=1%, k=2)		8.2 g	820 mg	1 g
Minimum weight (U=1%, k=2) in fine range		820 mg	–	–
Settling time		0.8 s	1.2 s	1.5 s
Settling time in fine range		1.2 s	–	–
Interface update rate		23 1/s	23 1/s	23 1/s
Usable height of draft shield		–	–	–
Weight of balance		6.9 kg	6.9 kg	6.6 kg
Dimensions				
Balance dimensions (W × D × H)		195 × 367 × 97 mm	195 × 367 × 97 mm	195 × 367 × 97 mm
Weighing pan dimensions		172 × 205 mm (W × D)	172 × 205 mm (W × D)	172 × 205 mm (W × D)
Weights for routine testing				
OIML CarePac		#11123011	#11123011	–
Weights		5000 g F2, 200 g F2	5000 g F2, 200 g F2	10000 g F2, 500 g F2
ASTM CarePac		#11123111	#11123111	–
Weights		5000 g 4, 200 g 4	5000 g 4, 200 g 4	10000 g 4, 500 g 4

sd = Standard deviation

[1] According to OIML R76

[2] In the temperature range 10 … 30 °C

[3] After putting into operation for the first time, with the self-adjustment function activated (ProFACT or FACT)

15.4.4 Balances with readability of 0.1 g, S platform

		XS4001S	XS6001S	XS8001S
Limit values				
Maximum capacity		4.1 kg	6.1 kg	8.1 kg
Readability		100 mg	100 mg	100 mg
Tare range (from…to)		0 … 4.1 kg	0 … 6.1 kg	0 … 8.1 kg
Maximum capacity in fine range		–	–	–
Readability in fine range		–	–	–
Repeatability (at nominal load)	sd	80 mg (2 kg)	80 mg (2 kg)	80 mg (5 kg)
Repeatability in fine range (at nominal load)	sd	–	–	–
Linearity deviation		60 mg (1 kg)	60 mg (2 kg)	100 mg (2 kg)
Eccentricity deviation (test load) [1]		200 mg (2 kg)	200 mg (2 kg)	200 mg (5 kg)
Sensitivity offset (test weight)		240 mg (4 kg)	240 mg (6 kg)	600 mg (8 kg)
Sensitivity temperature drift [2]		0.0015%/°C	0.0015%/°C	0.0015%/°C
Sensitivity stability [3]		0.005%/a	0.005%/a	0.005%/a
Typical values				
Repeatability	sd	40 mg	40 mg	40 mg
Repeatability in fine range	sd	–	–	–
Linearity deviation		20 mg	20 mg	30 mg
Eccentricity deviation (test load) [1]		60 mg (2 kg)	60 mg (2 kg)	60 mg (5 kg)
Sensitivity offset (test weight)		80 mg (4 kg)	72 mg (6 kg)	160 mg (8 kg)
Minimum weight (according to USP)		82 g	82 g	82 g
Minimum weight (according to USP) in fine range		–	–	–
Minimum weight (U=1%, k=2)		8.2 g	8.2 g	8.2 g
Minimum weight (U=1%, k=2) in fine range		–	–	–
Settling time		0.8 s	0.8 s	1 s
Settling time in fine range		–	–	–
Interface update rate		23 1/s	23 1/s	23 1/s
Usable height of draft shield		–	–	–
Weight of balance		6.4 kg	6.4 kg	6.4 kg
Dimensions				
Balance dimensions (W × D × H)		195 × 367 × 96 mm	195 × 367 × 96 mm	195 × 367 × 96 mm
Weighing pan dimensions		190 × 223 mm (W × D)	190 × 223 mm (W × D)	190 × 223 mm (W × D)
Weights for routine testing				
OIML CarePac		#11123010	#11123011	#11123011
Weights		2000 g F2, 200 g F2	5000 g F2, 200 g F2	5000 g F2, 200 g F2
ASTM CarePac		#11123110	#11123111	#11123111
Weights		2000 g 4, 200 g 4	5000 g 4, 200 g 4	5000 g 4, 200 g 4

sd = Standard deviation

[1] According to OIML R76

[2] In the temperature range 10 … 30 °C

[3] After putting into operation for the first time, with the self-adjustment function activated (ProFACT or FACT)

		XS10001S
Limit values		
Maximum capacity		10.1 kg
Readability		100 mg
Tare range (from…to)		0 … 10.1 kg
Maximum capacity in fine range		–
Readability in fine range		–
Repeatability (at nominal load)	sd	80 mg (5 kg)

		XS10001S
Repeatability in fine range (at nominal load)	sd	–
Linearity deviation		100 mg (2 kg)
Eccentricity deviation (test load) [1]		200 mg (5 kg)
Sensitivity offset (test weight)		500 mg (10 kg)
Sensitivity temperature drift [2]		0.0015%/°C
Sensitivity stability [3]		0.005%/a
Typical values		
Repeatability	sd	40 mg
Repeatability in fine range	sd	–
Linearity deviation		30 mg
Eccentricity deviation (test load) [1]		60 mg (5 kg)
Sensitivity offset (test weight)		150 mg (10 kg)
Minimum weight (according to USP)		82 g
Minimum weight (according to USP) in fine range		–
Minimum weight (U=1%, k=2)		8.2 g
Minimum weight (U=1%, k=2) in fine range		–
Settling time		1 s
Settling time in fine range		–
Interface update rate		23 1/s
Usable height of draft shield		–
Weight of balance		6.6 kg
Dimensions		
Balance dimensions (W × D × H)		195 × 367 × 96 mm
Weighing pan dimensions		190 × 223 mm (W × D)
Weights for routine testing		
OIML weights		10000 g F2, 500 g F2
ASTM weights		10000 g 4, 500 g 4

sd = Standard deviation

[1] According to OIML R76

[2] In the temperature range 10 … 30 °C

[3] After putting into operation for the first time, with the self-adjustment function activated (ProFACT or FACT)

15.4.5 Balances with readability of 0.1 g, L platform

		XS10001L	XS16001L	XS32001LDR
Limit values				
Maximum capacity		10.1 kg	16.1 kg	32.1 kg
Readability		100 mg	100 mg	1 g
Tare range (from…to)		0 … 10.1 kg	0 … 16.1 kg	0 … 32.1 kg
Maximum capacity in fine range		–	–	6.4 kg
Readability in fine range		–	–	100 mg
Repeatability (at nominal load)	sd	80 mg (5 kg)	80 mg (5 kg)	600 mg (10 kg)
Repeatability in fine range (at nominal load)	sd	–	–	100 mg (6 kg)
Linearity deviation		200 mg (2 kg)	200 mg (4 kg)	300 mg (5 kg)
Eccentricity deviation (test load) [1]		300 mg (5 kg)	300 mg (5 kg)	1 g (10 kg)
Sensitivity offset (test weight)		500 mg (10 kg)	800 mg (16 kg)	960 mg (32 kg)
Sensitivity temperature drift [2]		0.0015%/°C	0.0015%/°C	0.001%/°C
Sensitivity stability [3]		0.005%/a	0.005%/a	0.003%/a
Typical values				
Repeatability	sd	40 mg	40 mg	400 mg
Repeatability in fine range	sd	–	–	40 mg
Linearity deviation		60 mg	60 mg	200 mg
Eccentricity deviation (test load) [1]		100 mg (5 kg)	100 mg (5 kg)	600 mg (10 kg)
Sensitivity offset (test weight)		120 mg (10 kg)	128 mg (16 kg)	320 mg (32 kg)
Minimum weight (according to USP)		120 g	82 g	820 g
Minimum weight (according to USP) in fine range		–	–	82 g
Minimum weight (U=1%, k=2)		12 g	8.2 g	82 g
Minimum weight (U=1%, k=2) in fine range		–	–	8.2 g
Settling time		1 s	1.5 s	1.5 s
Settling time in fine range		–	–	1.5 s
Interface update rate		23 1/s	23 1/s	23 1/s
Usable height of draft shield		–	–	–
Weight of balance		12.4 kg	12.4 kg	12.4 kg
Dimensions				
Balance dimensions (W × D × H)		360 × 404 × 131 mm	360 × 404 × 131 mm	360 × 404 × 131 mm
Weighing pan dimensions		280 × 360 mm (W × D)	280 × 360 mm (W × D)	280 × 360 mm (W × D)
Weights for routine testing				
OIML weights		10000 g F2, 500 g F2	10000 g F2, 500 g F2	20000 g F2, 1000 g F2
ASTM weights		10000 g 4, 500 g 4	10000 g 4, 500 g 4	20000 g 4, 1000 g 4

sd = Standard deviation

[1] According to OIML R76

[2] In the temperature range 10 … 30 °C

[3] After putting into operation for the first time, with the self-adjustment function activated (ProFACT or FACT)

		XS32001L
Limit values		
Maximum capacity		32.1 kg
Readability		100 mg
Tare range (from…to)		0 … 32.1 kg
Maximum capacity in fine range		–
Readability in fine range		–
Repeatability (at nominal load)	sd	80 mg (10 kg)
Repeatability in fine range (at nominal load)	sd	–
Linearity deviation		300 mg (5 kg)
Eccentricity deviation (test load) [1]		300 mg (10 kg)
Sensitivity offset (test weight)		960 mg (32 kg)

		XS32001L
Sensitivity temperature drift [2]		0.001%/°C
Sensitivity stability [3]		0.003%/a
Typical values		
Repeatability	sd	40 mg
Repeatability in fine range	sd	–
Linearity deviation		30 mg
Eccentricity deviation (test load) [1]		100 mg (10 kg)
Sensitivity offset (test weight)		160 mg (32 kg)
Minimum weight (according to USP)		82 g
Minimum weight (according to USP) in fine range		–
Minimum weight (U=1%, k=2)		8.2 g
Minimum weight (U=1%, k=2) in fine range		–
Settling time		1.5 s
Settling time in fine range		–
Interface update rate		23 1/s
Usable height of draft shield		–
Weight of balance		12.4 kg
Dimensions		
Balance dimensions (W × D × H)		360 × 404 × 131 mm
Weighing pan dimensions		280 × 360 mm (W × D)
Weights for routine testing		
OIML weights		20000 g F2, 1000 g F2
ASTM weights		20000 g 4, 1000 g 4

sd = Standard deviation

[1] According to OIML R76

[2] In the temperature range 10 … 30 °C

[3] After putting into operation for the first time, with the self-adjustment function activated (ProFACT or FACT)

15.4.6 Balances with readability of 1 g, L platform

		XS16000L	XS32000L
Limit values			
Maximum capacity		16.1 kg	32.1 kg
Readability		1 g	1 g
Tare range (from…to)		0 … 16.1 kg	0 … 32.1 kg
Maximum capacity in fine range		–	–
Readability in fine range		–	–
Repeatability (at nominal load)	sd	600 mg (5 kg)	600 mg (10 kg)
Repeatability in fine range (at nominal load)	sd	–	–
Linearity deviation		600 mg	600 mg
Eccentricity deviation (test load) [1]		1 g (5 kg)	1 g (10 kg)
Sensitivity offset (test weight)		1.28 g (16 kg)	1.92 g (32 kg)
Sensitivity temperature drift [2]		0.0015%/°C	0.0015%/°C
Sensitivity stability [3]		0.005%/a	0.005%/a
Typical values			
Repeatability	sd	400 mg	400 mg
Repeatability in fine range	sd	–	–
Linearity deviation		400 mg	400 mg
Eccentricity deviation (test load) [1]		600 mg (5 kg)	600 mg (10 kg)
Sensitivity offset (test weight)		380 mg (16 kg)	650 mg (32 kg)
Minimum weight (according to USP)		820 g	820 g
Minimum weight (according to USP) in fine range		–	–
Minimum weight (U=1%, k=2)		82 g	82 g
Minimum weight (U=1%, k=2) in fine range		–	–
Settling time		1.2 s	1.2 s
Settling time in fine range		–	–
Interface update rate		23 1/s	23 1/s
Usable height of draft shield		–	–
Weight of balance		12.4 kg	12.4 kg
Dimensions			
Balance dimensions (W × D × H)		360 × 404 × 131 mm	360 × 404 × 131 mm
Weighing pan dimensions		280 × 360 mm (W × D)	280 × 360 mm (W × D)
Weights for routine testing			
OIML weights		10000 g F2, 500 g F2	20000 g F2, 1000 g F2
ASTM weights		10000 g 4, 500 g 4	20000 g 4, 1000 g 4

sd = Standard deviation

[1] According to OIML R76

[2] In the temperature range 10 … 30 °C

[3] After putting into operation for the first time, with the self-adjustment function activated (ProFACT or FACT)

15.5 Dimensions

Dimensions in mm.

15.5.1 Balances with readability of 1 mg, S platform with draft shield and SmartPan

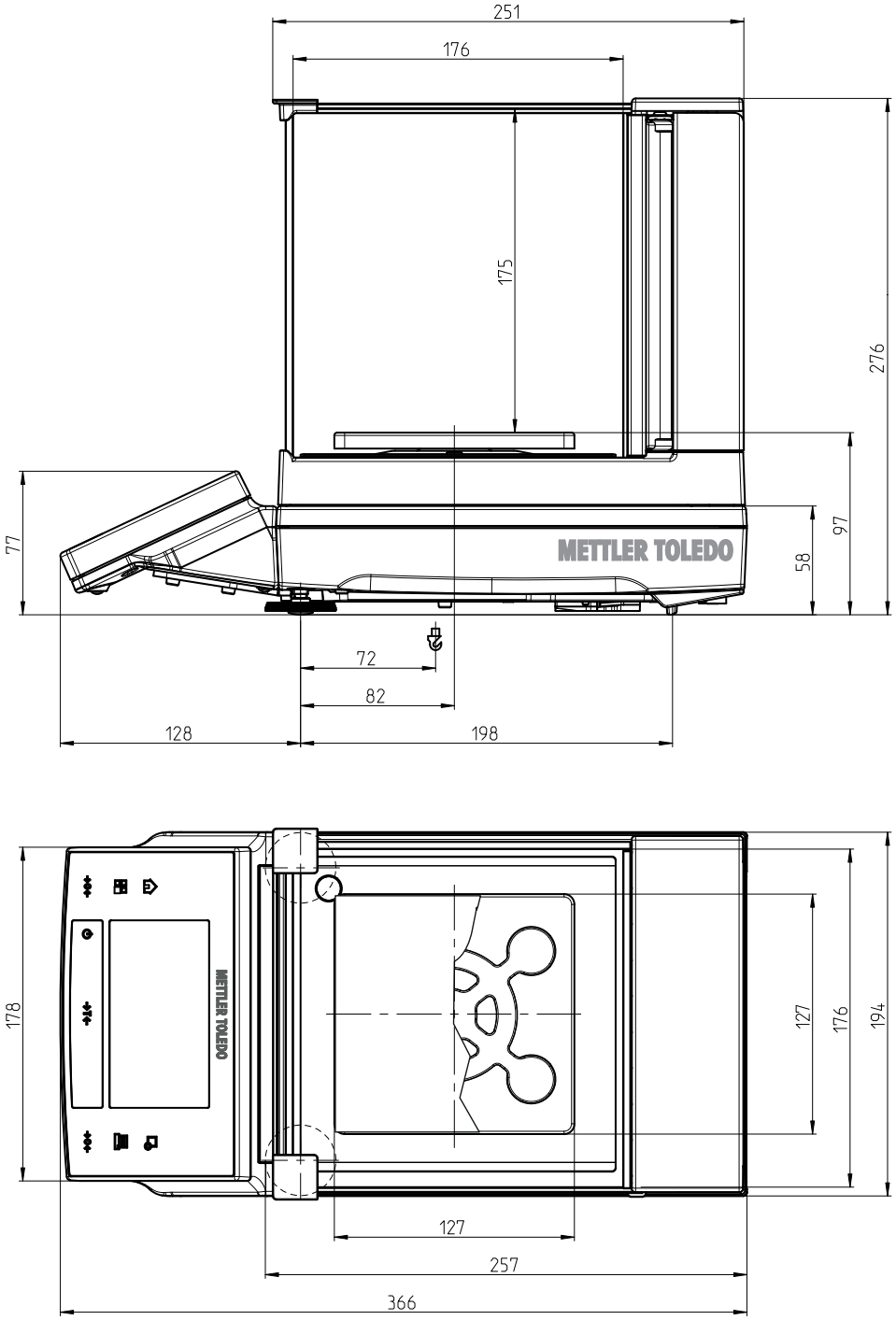

3: XS303S, XS603S, XS1203S

15.5.2 Balances with readability of 1 mg, S platform with SmartPan

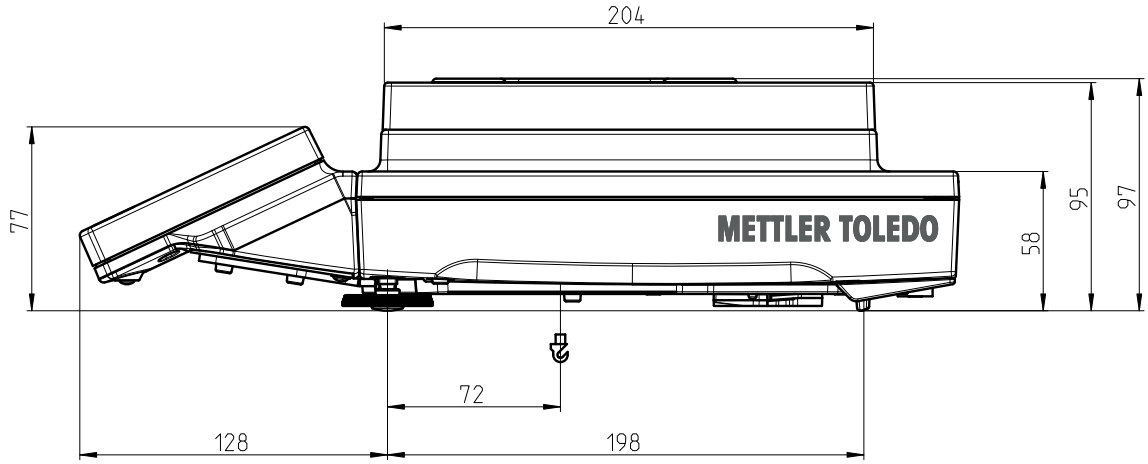

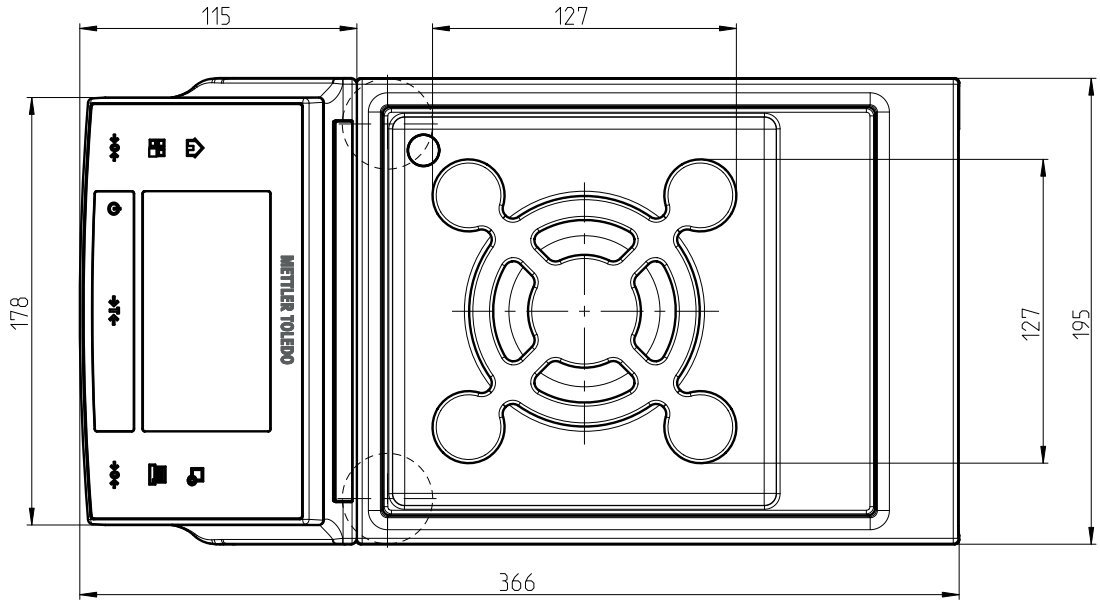

4: Models: XS303SN, XS603SN

15.5.3 Balances with readability of 10 mg, S platform with SmartPan

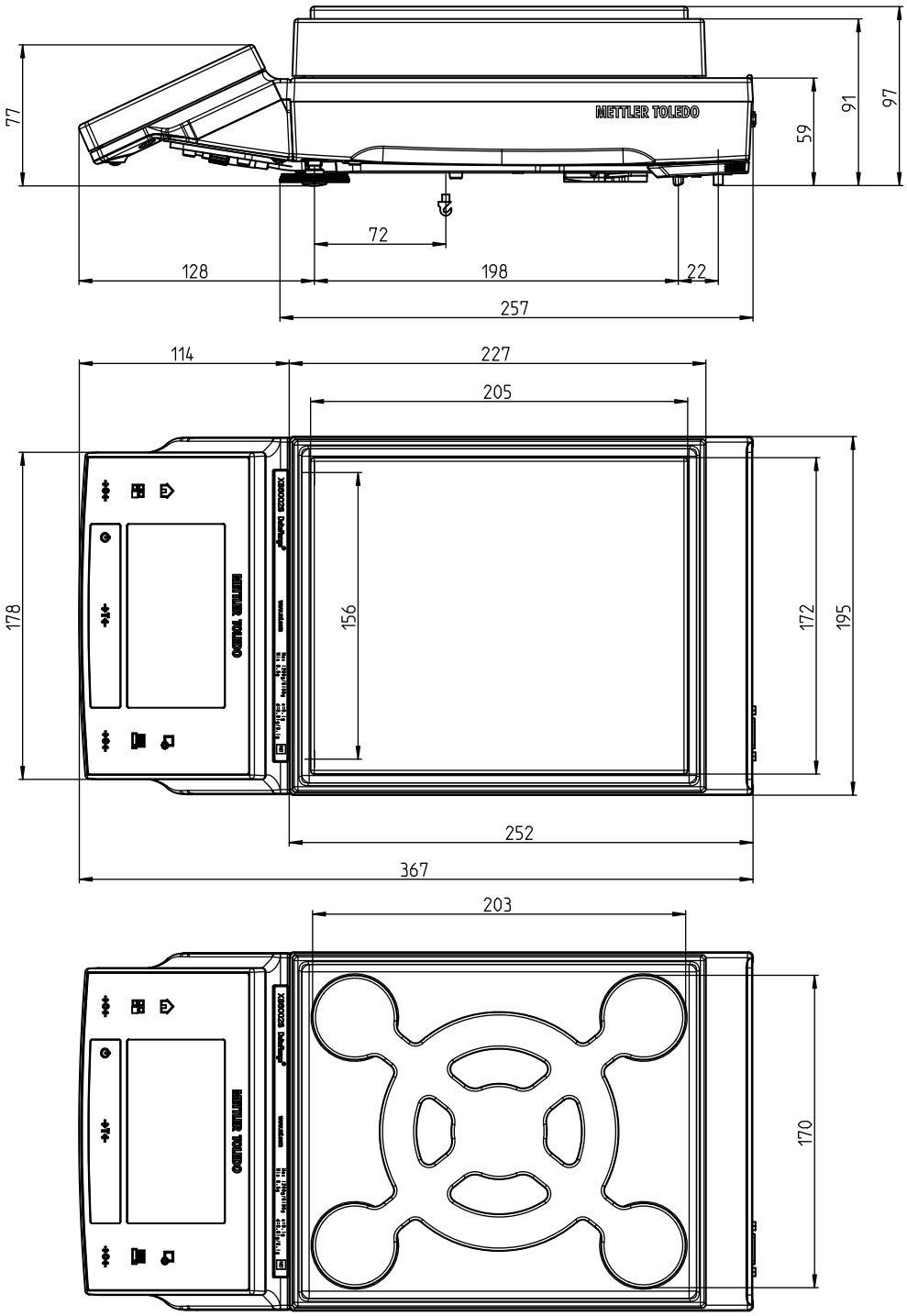

5: Models: XS1202S, XS2002S, XS4002S, XS6002SDR, XS6002S, XS10002S

15.5.4 Balances with readability of 0.1 g, S platform

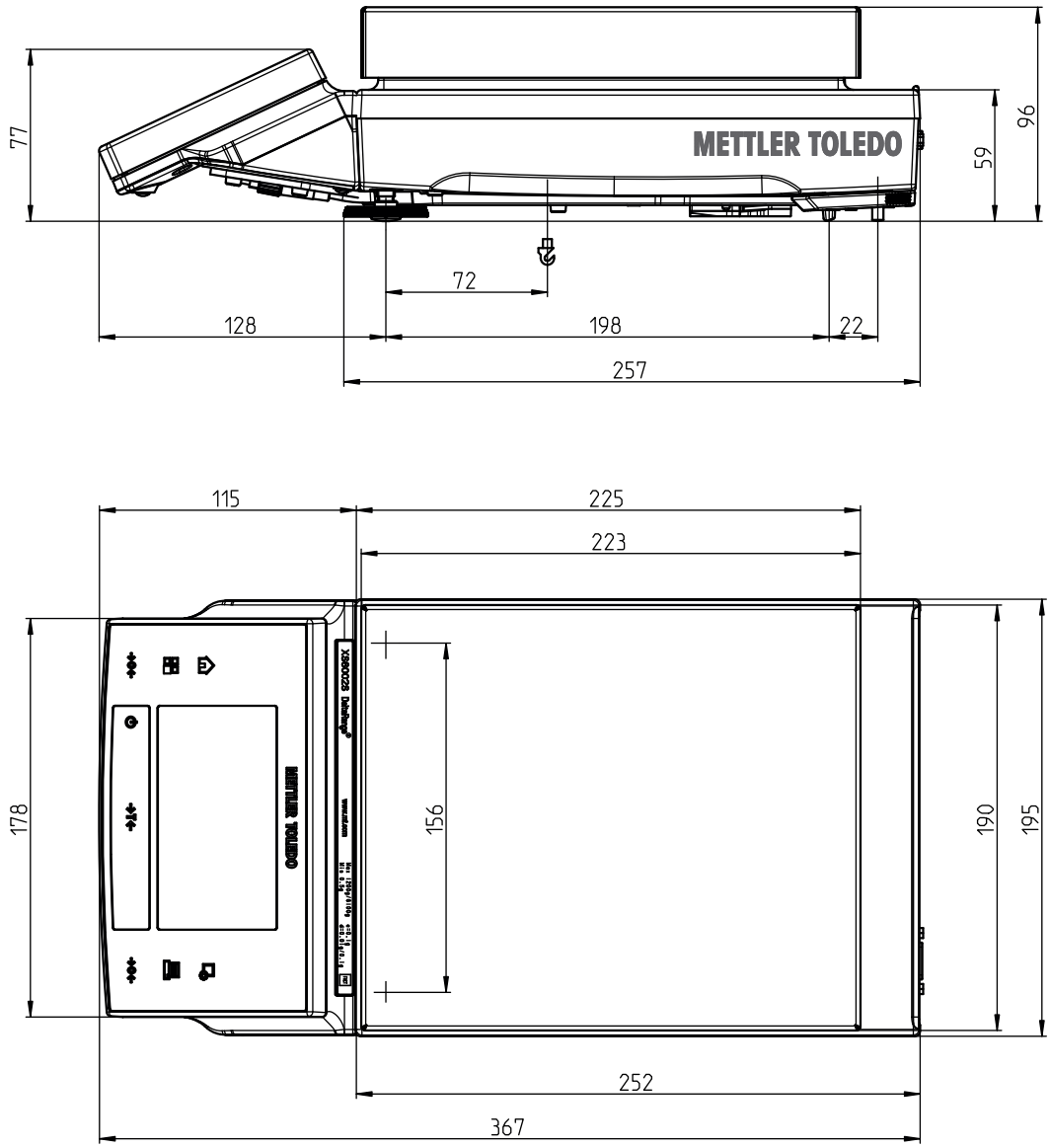

6: Models: XS4001S, XS6001S, XS8001S, XS10001S

15.5.5 Balances with readability of 0.1 g / 1 g, L platform

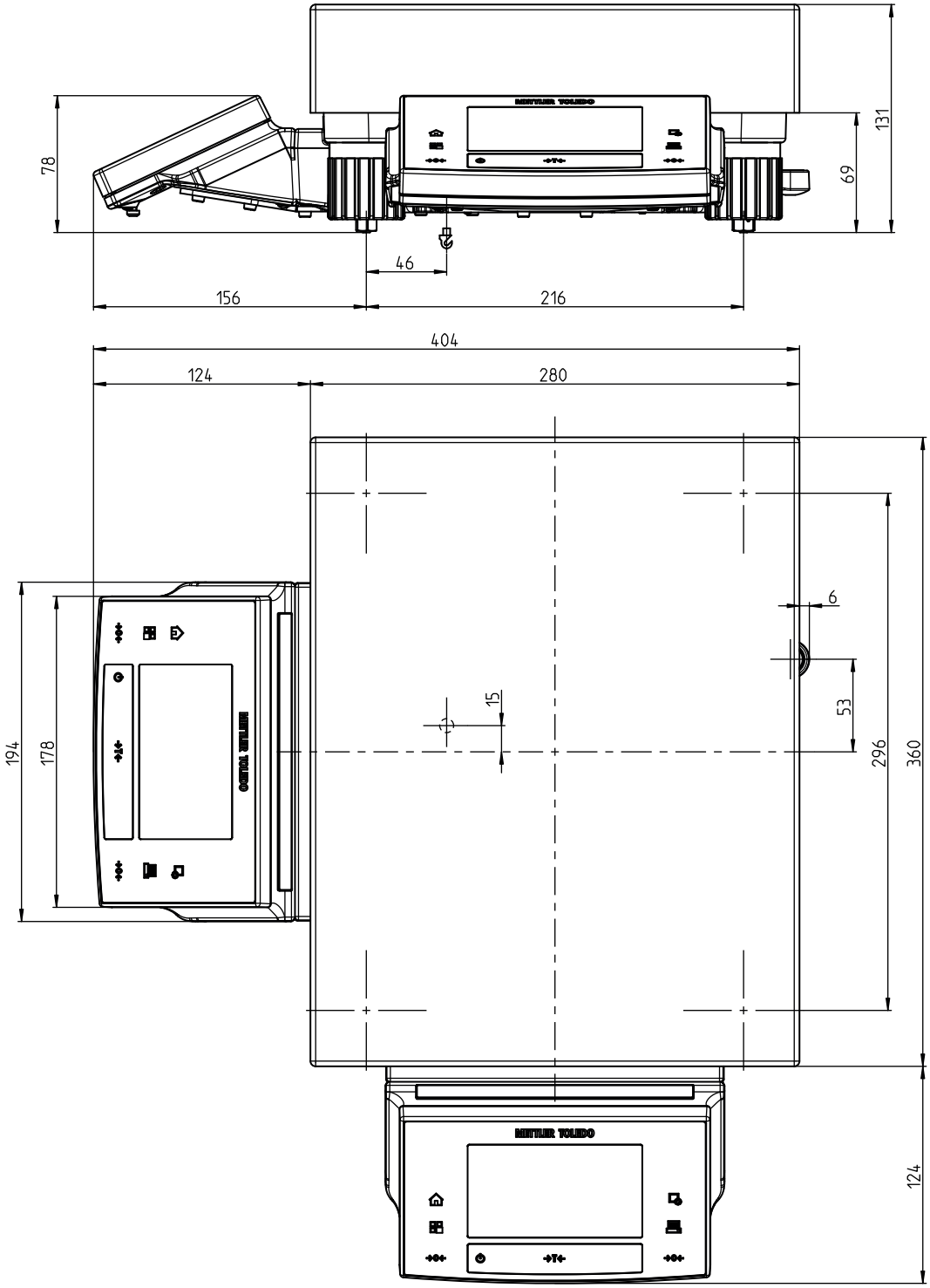

7: Models: XS10001L, XS16001L, XS32001LDR, XS32001L, XS16000L, XS32000L

15.6 Interfaces

15.6.1 Specifications of RS232C

Interface type:	Voltage interface according to EIA RS-232C/DIN 66020 (CCITT V24/V.28)	
Max. cable length:	15 m	
Signal level:	Outputs: +5 V ... +15 V (RL = 3 – 7 kΩ) –5 V ... –15 V (RL = 3 – 7 kΩ)	Inputs: +3 V ... 25 V –3 V ... 25 V
Connector:	Sub-D, 9-pole, female	
Operating mode:	Full duplex	
Transmission mode:	Bit-serial, asynchronous	
Transmission code:	ASCII	
Baud rates:	600, 1200, 2400, 4800, 9600, 19200, 38400[1)] (firmware selectable)	
Bits/parity:	7-bit/even, 7-bit/odd, 7-bit/none, 8-bit/none (firmware selectable)	
Stop bits:	1 stop bit	
Handshake:	None, XON/XOFF, RTS/CTS (firmware selectable)	
End-of-line:	<CR><LF>, <CR>, <LF> (firmware selectable)	
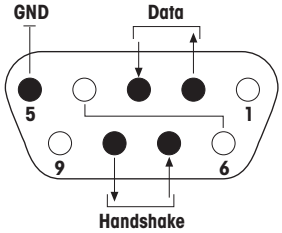	Pin 2: Balance transmit line (TxD) Pin 3: Balance receive line (RxD) Pin 5: Ground signal (GND) Pin 7: Clear to send (hardware handshake) (CTS) Pin 8: Request to send (hardware handshake) (RTS)	

1) 38400 baud is only possible in special cases, such as:
- Weighing platform without terminal, or
- Weighing platform with terminal, only via the optional RS232C interface.

15.6.2 Specifications of "Aux" connection

You can connect the METTLER TOLEDO "ErgoSens" or an external switch to sockets "Aux 1" and "Aux 2". This allows you to start functions such as taring, zeroing, printing and others.

External connection

Connector:	3.5 mm stereo jack connector	
Electrical data:	Max. voltage	12 V
	Max. current	150 mA

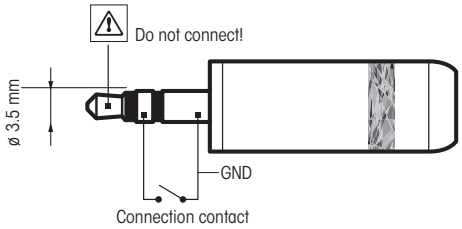

16 Accessories and Spare Parts

16.1 Accessories

	Description	Part No.
Printers		
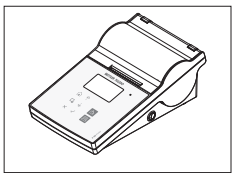	P-56RUE thermal printer with RS232C, USB and ethernet connections, simple printouts, date and time, label printing (limited).	30094673
	Paper roll, white, set of 10 pcs	30094723
	Paper roll, white, self-adhesive, set of 10 pcs	30094724
	Paper roll, white, self-adhesive labels, set of 6 pcs	30094725
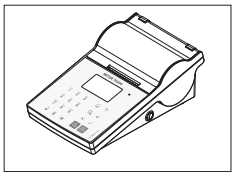	P-58RUE Thermal printer with RS232C, USB and ethernet connections, simple printouts, date and time, label printing, balance applications: statistics, formulation, totaling,	30094674
	Paper roll, white, set of 10 pcs	30094723
	Paper roll, white, self-adhesive, set of 10 pcs	30094724
	Paper roll, white, self-adhesive labels, set of 6 pcs	30094725
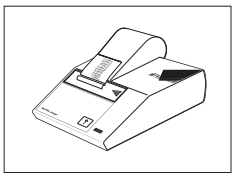	RS-P42 printer with RS232C connection to instrument	00229265
	Paper roll, set of 5 pcs	00072456
	Paper roll, self-adhesive, set of 3 pcs	11600388
	Ribbon cartridge, black, set of 2 pcs	00065975
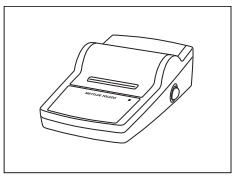	RS-P25 printer with RS232C connection to instrument	11124300
	Paper roll, set of 5 pcs	00072456
	Paper roll, self-adhesive, set of 3 pcs	11600388
	Ribbon cartridge, black, set of 2 pcs	00065975
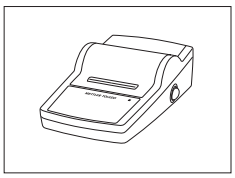	RS-P26 printer with RS232C connection to instrument (with date and time)	11124303
	Paper roll, set of 5 pcs	00072456
	Paper roll, self-adhesive, set of 3 pcs	11600388
	Ribbon cartridge, black, set of 2 pcs	00065975
Optional interfaces		
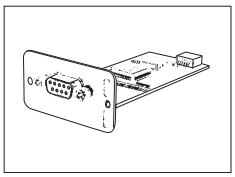	Second RS232C Interface	11132500
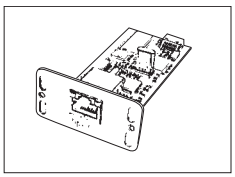	Ethernet Interface for connection to an Ethernet network	11132515

BT2 Option: Bluetooth Interface, single-point connection 30237796

BT2 Paired Option: Bluetooth Interface for multipoint connection for up to 6 Bluetooth devices 30237797

PS/2 option: Interface for connecting barcode readers 11132520

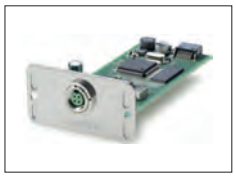

LocalCAN option: Interface for connection of up to 5 LC (LocalCAN) instruments 11132505

MiniMettler option: Interface MiniMettler, for connection to older (legacy) METTLER TOLEDO systems 11132510

Cables for RS232C interface

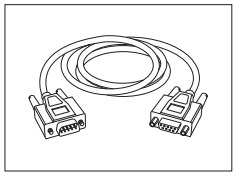

RS9 – RS9 (m/f): connection cable for PC, length = 1 m 11101051

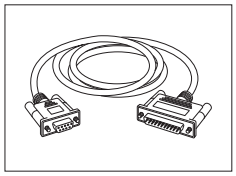

RS9 – RS25 (m/f): connection cable for PC, length = 2 m 11101052

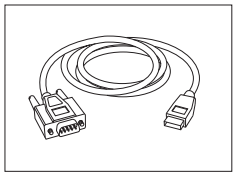

RS232 - USB converter cable – Cable with converter to connect a balance (RS232) to a USB port 64088427

Cables for LocalCAN interface

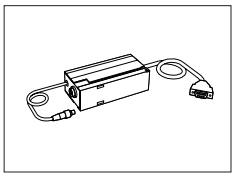

LC – RS9: Cable for connecting a PC with RS232C, 9-pin (f), lenght = 2 m — 00229065

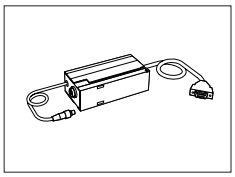

LC – RS25: Cable for connecting a printer or PC with RS232C, 25-pin (m/f), lenght = 2 m — 00229050

LC – CL: Cable for connecting a device with METTLER TOLEDO CL interface (5-pin), length = 2 m — 00229130

LC – LC2: Extension cable for LocalCAN, length = 2 m — 00229115

LC – LC5: Extension cable for LocalCAN, length = 5 m — 00229116

LC – LCT: Cable branch (T-connector) for LocalCAN — 00229118

Cables for MiniMettler interface

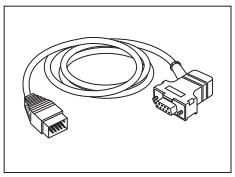

MM – RS9f: RS232C connection cable to MiniMettler interface, length = 1.5 m — 00229029

Terminal extension cable

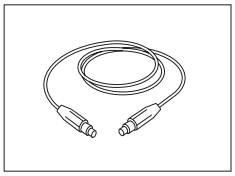

Terminal extension cable, length = 4.5 m — 11600517

Cable, one-sided open (2-pin)

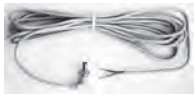

Cable between balance and AC adapter, length = 4 m	11132037

Auxiliary displays

RS/LC-BLDS auxiliary display for table or balance mounting, 480 mm, LCD display with backlighting	11132630

Sensors

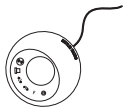

ErgoSens, optical sensor for hands-free operation	11132601

Footswitches

Footswitch with selectable function for balances (Aux 1, Aux 2)	11106741

LC-FS foot switch with selectable function for balances with LocalCAN interface	00229060

Filling-process control

LV11 automatic feeder for automatic loading of small items on the balance	21900608
Draft shield door for "Pro" Draft shield with opening for LV11	11132711
SQC14 filling process control	
Compact instrument with printer for control of up to 16 articles	00236210
Compact instrument with printer for control of up to 60 articles	00236211

AntiStatic kit

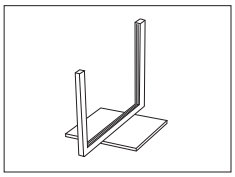

Universal AntiStatic Kit complete (U-shaped), including electrode and power supply	11107767
Optional: Second U-electrode* for universal AntiStatic Kit	11107764
* Power supply for optional, second U-elektrode (11107764)	11107766

Density determination

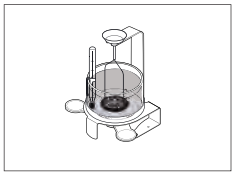

Kit for density determination of solids and liquids (for 1 mg and 0.1 mg models)	11132680

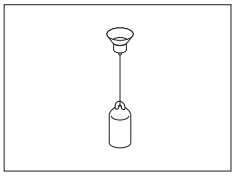

Sinker for density of liquids in conjunction with density kit	00210260
Calibrated (sinker + certificate)	00210672
Recalibrated (new certificate)	00210674

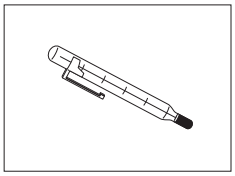

Calibrated thermometer with certificate	11132685

Anti-theft devices

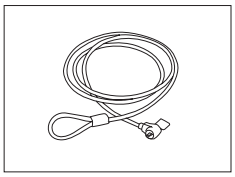

Steel cable	11600361

Barcode reader

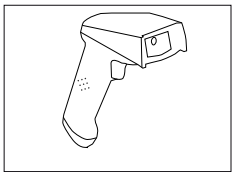

RS232C Barcode Reader		21901297
The following accessories are needed for operation (not included):		
	RS232 F cable	21901305
	Null modem adapter	21900924
Plus one of the following:	AC adapter 5 V for EU	21901370
	AC adapter 5 V for US	21901372
	AC adapter 5 V for GB	21901371
	AC adapter 5 V for AU	21901370 + 71209966

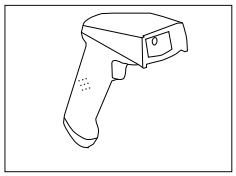

RS232C Barcode Reader – Cordless		21901299
The following accessories are needed for operation (not included):		
	Cradle	21901300
	RS232 F cable	21901305
	Null modem adapter	21900924
Plus one of the following:	AC adapter 12 V for EU	21901373
	AC adapter 12 V for US	21901375
	AC adapter 12 V for GB	21901374
	AC adapter 12 V for AU	21901373 + 71209966

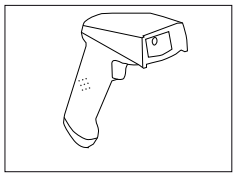

PS/2 Barcode Reader, without cable	21901297
PS/2 wedge single cable	21901307

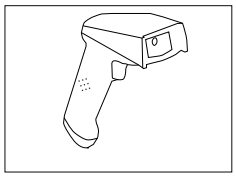

PS/2Y Barcode Reader, without cable	21901297
PS/2 wedge twin (Y) cable	21901308

Transport cases

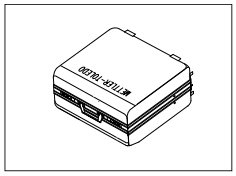

Transport case for 5 mg, 10 mg and 0.1 g models, S platform	30113497

Protective covers

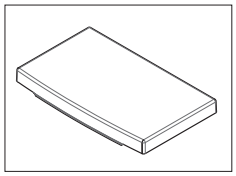

Protective cover for terminal, S platform	11106870

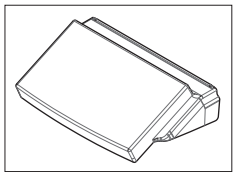

Protective cover for terminal, L platform	11132573

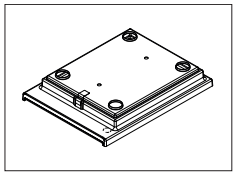

Protective cover for weighing platform for 5 mg, 10 mg and 0.1 g models, S platform	11133034

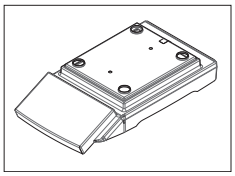

Protective cover for balance with S platform 10 mg / 0.1 g models — 11132571

Dust covers

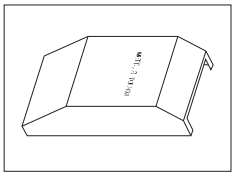

Dust cover for 5 mg, 10 mg and 0.1 g models, S platform — 30035839

Software

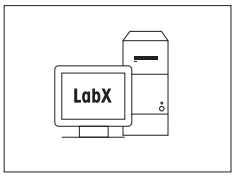

LabX direct balance (simple data transfer) — 11120340

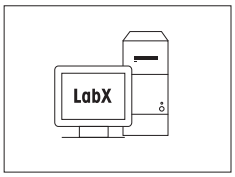

LabX balance express (standalone system) — 11153120

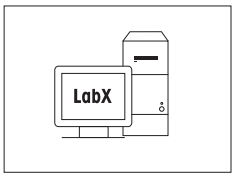

LabX balance server (server edition) — 11153121

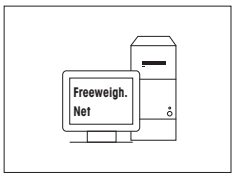

Freeweigh.Net — 21900895

Production certificate

Production Certificate "PRO" — 11106895

Weighing pans

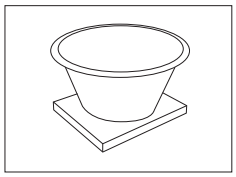

Dynamic weighing pan for 0.1 g and 10 mg models, with 4 litre bowl and contact mat, S platform — 11132657

Draft shields

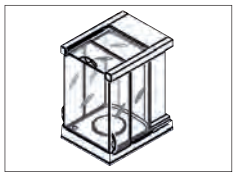

"Pro" Draft shield glass free for 0.1 mg and 1 mg models (food industry), usable height 248 mm, S platform — 11131652

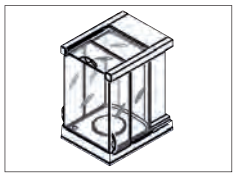

"Pro" Draft shield for 0.1 mg and 1 mg models, usable height 248 mm, S platform — 30136289

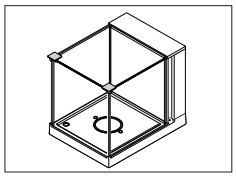

"MagicCube" Draft shield for 0.1 mg and 1 mg models, usable height 175 mm, S platform — 30136284

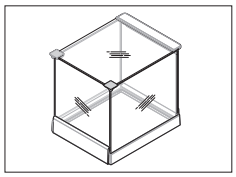

"Simple" Draft shield with draft shield element for 5 mg and 10 mg models, usable height 175 mm, S platform — 30113496

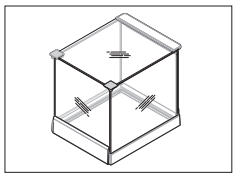

"Simple" Draft shield with draft shield element for 0.1 g models, usable height 175 mm, S platform — 11131653

The weighing pan set must be ordered additionally — 11132660

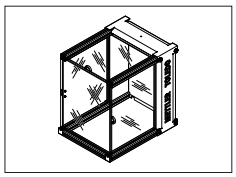

Draft shield to cover the entire balance "XP-W12" 300 × 450 × 450 mm (W × D × H), S platform — 11134430

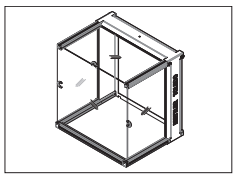

Draft shield to cover the entire balance "XP-W64" 550 × 470 × 580 mm (W × D × H), L platform — 11134470

Weighing below the balance

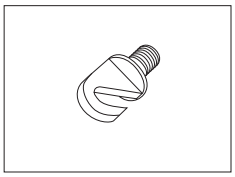

Hook for the hanger (depending on the model)	11132565

Various

Terminal stand for placement of the terminal 30 cm above the weighing pan, S platform	30125077
In addition, the adapter kit for the terminal must be ordered separately	30113494

Terminal stand for placement of the terminal 30 cm above the weighing pan, L platform	30125333
In addition, the adapter kit for the terminal must be ordered separately	30113494

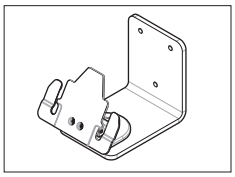

Wall fixture for terminal	30138798
In addition, the adapter kit for the terminal must be ordered separately	30113494

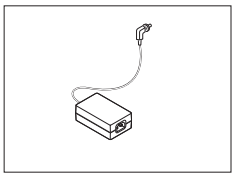

AC/DC adapter (without power cable) 100–240 V AC, 0.8 A, 50/60 Hz, 12 V DC 2.5 A	11107909

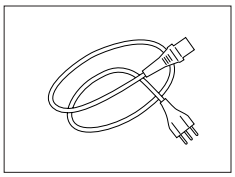

Country-specific 3-Pin power cable with grounding conductor.

Power cable AU	00088751
Power cable BR	30015268
Power cable CH	00087920
Power cable CN	30047293
Power cable DK	00087452
Power cable EU	00087925
Power cable GB	00089405
Power cable IL	00225297
Power cable IN	11600569
Power cable IT	00087457
Power cable JP	11107881
Power cable TH, PE	11107880
Power cable US	00088668
Power cable ZA	00089728

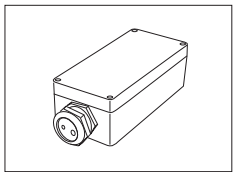

IP54 protective housing for AC adapter 11132550

16.2 Spare parts

Various

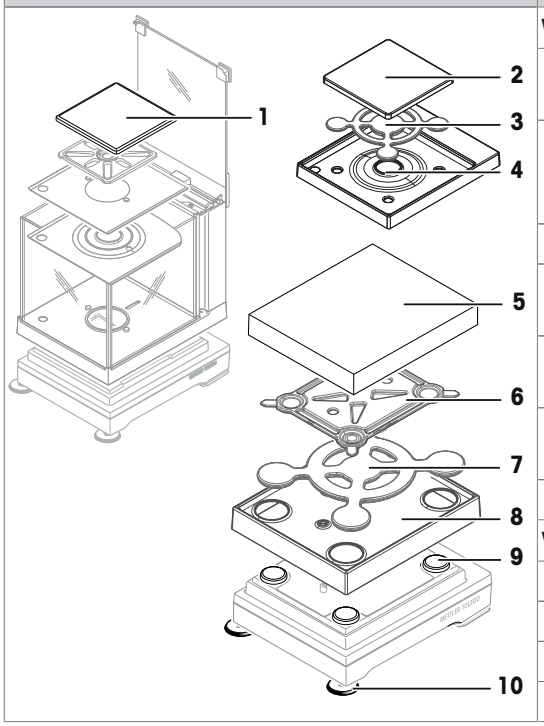

Pos	Description		Part No.
Weighing pans, S platform			
1	1 mg	Weighing pan 127 × 127 mm	11131022
2	1 mg	Weighing pan 127 × 127 mm for balances with SmartPan	30215433
3	1 mg	SmartPan	30215431
5	0.1 g	Weighing pan 190 × 223 mm	11131031
5	10 mg	Weighing pan 172 × 205 mm	30215056
6	0.1 g	Weighing pan support, S platform	11131037
7	10 mg	SmartPan	30215057
Various			
4	1 mg	Drip tray	30215432
8	10 mg	Drip tray	30113501
9		Cap pan support, 1 piece	11131029
10		Foot screw, S platform	30072531

Various

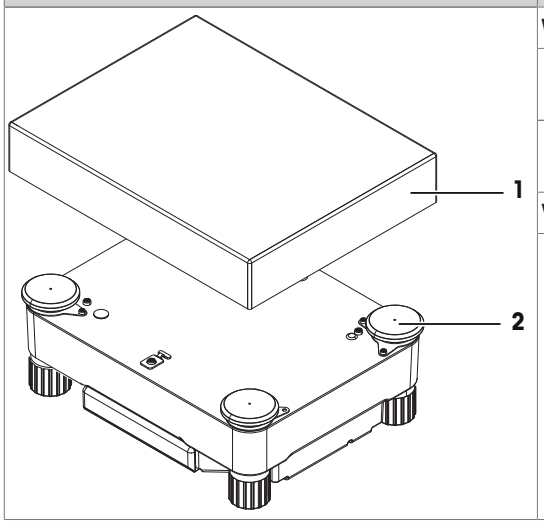

Pos	Description		Part No.
Weighing pans, L platform			
1	≤ 32 kg	Weighing pan 280 × 360 mm	00239105
1	64 kg	Weighing pan 280 × 360 mm	11102124
Various			
2		Cap pan support, set of 4 pieces	30215367

Draft shield "Pro", S platform (0.1 mg + 1 mg)

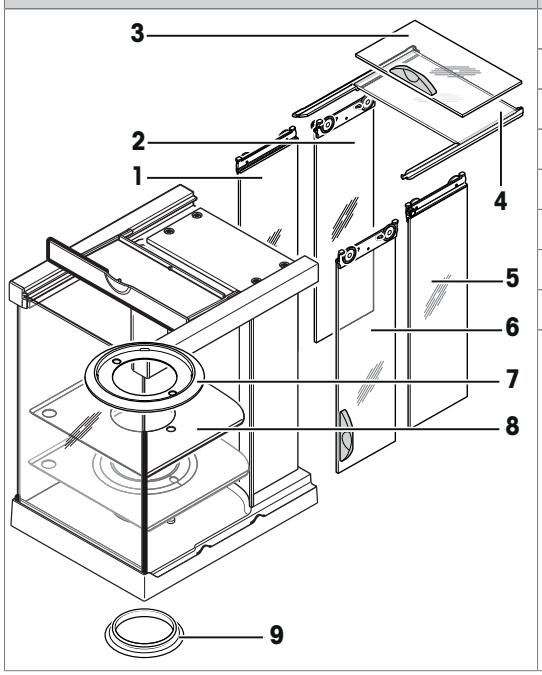

Pos	Description	Part No.
1	Door front left	11133080
2	Door back left	11133079
3	Door top front	11133082
4	Door top back	11133081
5	Door back right	11133077
6	Door front right	11133078
7	Draft shield element, 0.1 mg	11131531
8	Bottom plate, 0.1 mg	11131539
10	Ring seal, 0.1 mg	11131551

Draft Shield, "Magic Cube"

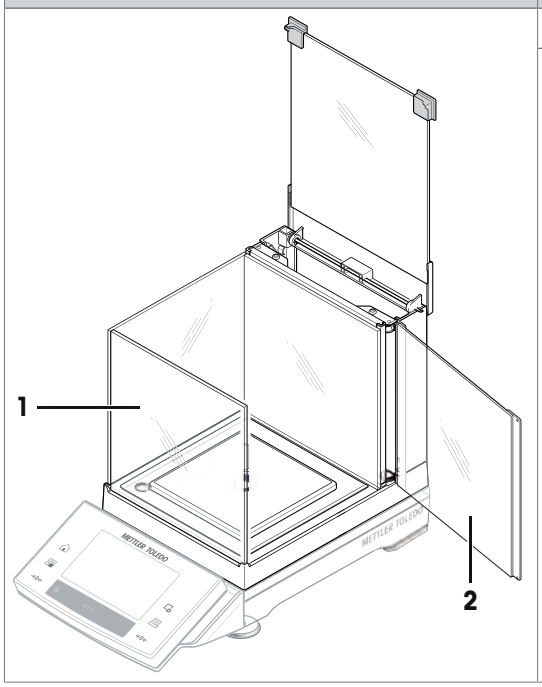

Pos	Description	Part No.
1	U-Glass	11133035
2	Side door	11133037

Draft shield "Simple"

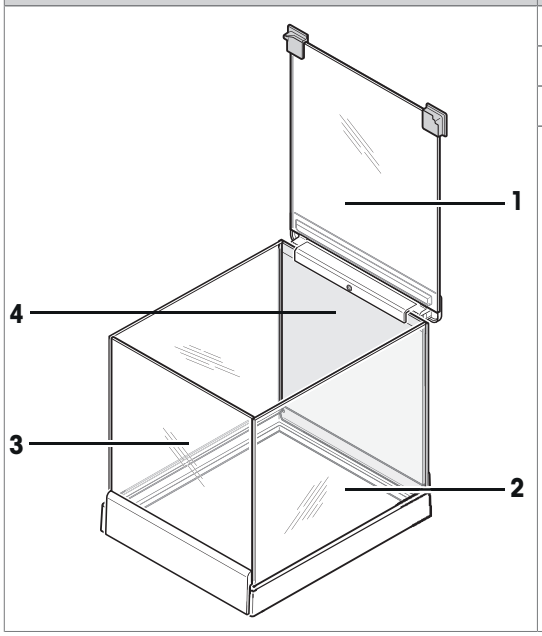

Pos	Description	Part No.
1	Top glass complete	11133095
2	Side glass	11131736
3	Front glass complete	11133096
4	Rear panel complete	11133097

Packaging

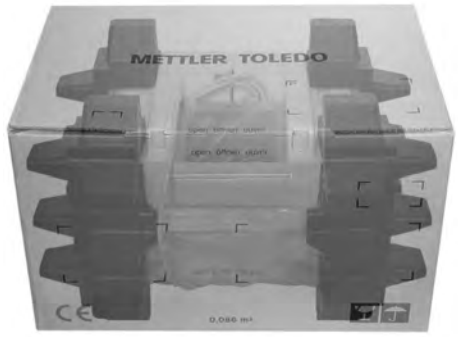

Pos	Description	Part No.
S balances, Type XSxx3S/XSxx3SN (1 mg)		
	Packaging complete with draft shield	11133053
	Export carton	11132834
	Packaging complete for draft shield	11133049
	Export carton for draft shield	11132824
S balances, Type XSxx2S (10 mg)		
	Packaging complete	11133050
	Export carton	11132839
S balances, Type XSxx1S (0.1 g)		
	Packaging complete	11133051
	Export carton	11132839
L balances, Type XSxxxxL		
	Packaging complete	11133057
	Export carton	11132912

17 Appendix

17.1 MT-SICS interface commands and functions

Many of the instruments and balances used have to be capable of integration in a complex computer or data acquisition system.

To enable you to integrate balances in your system in a simple manner and utilize their capabilities to the full, most balance functions are also available as appropriate commands via the data interface.

All new METTLER TOLEDO balances launched on the market support the standardized command set "METTLER TOLEDO Standard Interface Command Set" (MT-SICS). The commands available depend on the functionality of the balance.

For further information please refer to the Reference Manual MT-SICS downloadable from the Internet under

▶ www.mt.com/xs-precision

17.2 Procedure for certified balances

Preface

Certified balances are subject to the national, legal requirements of "non-automatic balances".

Switching on the balance

- **Switching on**
  - Immediately after being switched on, the balance displays 0.000.. g.
  - The balance is always started up with the "Factory setting" unit.
- **Switch-on range**
  - At maximum 20% of the type load, otherwise overload is displayed (OIML R76 4.5.1).
- **Stored value as switch-on zero point**
  - It is not permissible to use a stored value as a switch-on zero point; the MT-SICS `M35` command is not available (OIML R76 T.5.2).

Display

- **Display of the weight value**
  - The "e" certification value is always shown in the display and is specified at the model designation plate (OIML R76 T.3.2.3 and 7.1.4).
  - If the display increment is lower than the "e" certification value, this is variably displayed for the net, gross and weighed tare. (Graying of the digits or certification brackets) (OIML R76 T.2.5.4 and 3.4.1).
- In accordance with guidelines, the tested display increment (certification value) is never lower than 1 mg (OIML R76 T.3.4.2).
- At balances with d = 0.1 mg, the digits below 1 mg are displayed in gray. These digits in brackets are printed. In accordance with legal metrology requirements, this illustration does not affect the accuracy of the weighing results.
- **Units of measurement**
  - The display and info unit are firmly set to g or mg (depending on the model).
  - The following applies for the "Custom unit":
    - No certification brackets.
    - The following names are blocked, this applies to upper and lower case letters.
      - All official units (g, kg, ct etc.).
      - c, ca, car, cm, crt, cart, kt, gr, gra, gram, grm, k, kilo, to, ton.
      - All names with "o" which can be replaced by a zero (Oz, Ozt etc.).
- **Identification of the weight display**

– Gross, net, tare and other weight values are accordingly marked (OIML R76 4.6.5).
  – Net for net when a tare value has been used.
  – B or G for gross.
  – T for the weighed tare.
  – PT for the specified tare.
  – * or diff for the difference between the net or gross.

- **Info field**
  – The info weight value is handled metrologically in the same way as the weight value in the main display.

Printout (OIML R76 4.6.11)

- If a tare value is entered manually (PreTare), the PreTare value is always printed along with the net value (PT 123.45 g).
- The printed weight values are identified in the same way as the weight value on the display.

  I.e. N, B or G, T, PT, diff or *, with differentiation.
  Example:
  Single-range balance.

N	123.4[5] g
PT	10.00 g ➔ for PreTare
G	133.4[5] g

DR balance with 100.00 g fine range.

N	80.4[0] g
T	22.5[6] g ➔ for weighed tare
G	102.9[ ] g

Balance functions

- **Reset to zero**
  – The zero range is limited to a maximum of ± 2% of the full load (OIML R76 4.5.1).
- **Tare**
  – No negative tare values are permitted.
  – Tare immediate (TI) is not permitted, the MT-SICS `TI` command is not available (OIML R76 4.6.4).
- **1/xd**
  – **e = d**
    The 1/xd switchover is not permitted (OIML R76 3.1.2).
  – **e = 10d**
    This is only permitted in the case of the 1/10d switchover.
  – **e = 100d**
    Only the 1/10d and 1/100d switchover are permitted.

17.3 Recommended printer settings

English, German, French, Spanish, Italian, Polish, Czech, Hungarian

Printer		Balance	Balance/Printer				
Model	**Char Set**	**Char Set**	**Baud rate**	**Bit/Parity**	**Stop bits**	**Handshake**	**End of Line**
RS-P25/26/28	**Ansi/Win Latin 1**	**Ansi/Win**	**9600**	**8/No**	**1**	**Xon/Xoff**	**<CR><LF>** 1)
P-56RUE P-58RUE	**Ansi/Win Latin 1**	**Ansi/Win**	**9600**	**8/No**	**1**	**Xon/Xoff**	**<CR><LF>** 1)

Printer		Balance	Balance/Printer				
RS-P42	IBM/DOS [1]	IBM/DOS	1200	8/No	1	None	<CR><LF> [1]

Russian

Printer		Balance	Balance/Printer				
Model	Char Set	Char Set	Baud rate	Bit/Parity	Stop bits	Handshake	End of Line
RS-P25/26/28	IBM/DOS Cyrillic	Ansi/Win	9600	8/No	1	Xon/Xoff	<CR><LF> [1]
P-56RUE, P-58RUE	IBM/DOS Cyrillic	Ansi/Win	9600	8/No	1	Xon/Xoff	<CR><LF> [1]
RS-P42	___ [2]	___ [2]	___ [2]	___ [2]	___ [2]	___ [2]	___ [2]

Chinese

Printer		Balance	Balance/Printer				
Model	Char Set	Char Set	Baud rate	Bit/Parity	Stop bits	Handshake	End of Line
RS-P25/26/28	Ansi/Win Latin 1	Ansi/Win	9600	8/No	1	Xon/Xoff	<CR><LF> [1]
P-56RUE, P-58RUE	Ansi/Win Latin 1	Ansi/Win	9600	8/No	1	Xon/Xoff	<CR><LF> [1]
RS-P42	___ [2]	___ [2]	___ [2]	___ [2]	___ [2]	___ [2]	___ [2]

Japanese

Printer		Balance	Balance/Printer				
Model	Char Set	Char Set	Baud rate	Bit/Parity	Stop bits	Handshake	End of Line
RS-P25/26/28	Ansi/Win Latin 1	Ansi/Win	9600	8/No	1	Xon/Xoff	<CR><LF> [1]
P-56RUE, P-58RUE	Ansi/Win Japanese	Ansi/Win	9600	8/No	1	Xon/Xoff	<CR><LF> [1]
RS-P42	___ [2]	___ [2]	___ [2]	___ [2]	___ [2]	___ [2]	___ [2]

Katakana

Printer		Balance	Balance/Printer				
Model	Char Set	Char Set	Baud rate	Bit/Parity	Stop bits	Handshake	End of Line
RS-P25/26/28	Ansi/Win Japanese	Ansi/Win	9600	8/No	1	Xon/Xoff	<CR><LF> [1]
P-56RUE, P-58RUE	Ansi/Win Latin 1	Ansi/Win	9600	8/No	1	Xon/Xoff	<CR><LF> [1]
RS-P42	Ansi/Win [1]	Ansi/Win	1200	8/No	1	None	<CR><LF> [1]

[1] Printer settings not available.

[2] Required font for this language not available.

Glossary

Actual value

Weight from the weight certificate of a test weight.

Actual weight

The actual recorded weight of an external test weight. Irrespective of balance model.

Adjustment

Adjusts the balance sensitivity. For this purpose, at least one reference weight is placed on the weighing pan either manually or motorized. This is weighed and the indicated weight is stored. The sensitivity of the balance is subsequently corrected by the required amount.

Adjustment weight

External test weight for adjustment.

Calibration

Verification of the test weight with the issuance of a certificate.

Control limit

Tolerance of a process with respect to its set value. Exceeding the tolerance is a violation of quality requirements and therefore requires a correction of the process.

Eccentric load deviation

Deviation of weight indications caused by eccentric loads.

Eccentric load test

The purpose of the EC method (eccentric load test) is to ensure that every eccentric load deviation is within the necessary user SOP tolerances. The result corresponds to the highest of the 4 determined eccentric load deviations.

External adjustment weight

External test weight for adjustment.

External test weight

Traceable weight for adjustment or testing.

External test weight

External test weight for testing the adjustment.

FACT

FACT (Fully Automatic Calibration Technology) adjusts the balance based on a preselected temperature criterion fully automatically.

GWP History

History of test sequences carried out.

GWP Test Manager

List of safety functions for XS/XP balances. The balance provides active support with test requests and previously defined guided sequences.

GWP® Verification

Service providing a personalized document with precise suggestions for routine balance testing: • how should the balance be tested and how often • which weights should be used • which tolerances are appropriate

Internal adjustment weight

Built-in weight for adjustment.

Internal test weight

Built-in weight for testing the adjustment.

Internal weight

Built-in weight.

Method

A method describes the type of test to be carried out and defines the main purpose of a test sequence. The weights to be used and corresponding test or method tolerances must be defined as part of the method.

Method tolerances

Method result deviation tolerance limit.

Minimum weight

Minimum weight required for weighing with relative accuracy (MinWeigh).

ProFACT

ProFACT (Professional Fully Automatic Calibration Technology) adjusts the balance based on a preselected temperature criterion fully automatically.

Repeatability

The capability of a balance to display corresponding weights with repeated weighings of the same object in the same manner under the same conditions.

Repeatability test

Verification of the repeatability.

Result tolerances

The same as method tolerance.

Routine test

Test carried out routinely.

Routine test

Performance of different (routine) tests for testing the balance.

Sensitivity

A change in weight divided by the causal change in load.

Sensitivity test

Sensitivity verification.

Task

Tasks define when a test sequence must be carried out and how it is started and, for XP balances, who should carry out the test sequence. Before a task can be defined, the test sequence must already be defined.

Test

Collective term for testing a single function or an entire device.

Test history

Record of test results saved in a special fail-safe memory. The options in the test history allow the selection of results for documentation or printing.

Test sequence

Describes the type of test (method) and the weight with which this test must be carried out. It also defines the balance behavior if the test is not passed.

Test tolerances

Weight tolerance deviation limit for testing.

Test weight

An external weight used as a reference weight.

Testing the adjustment

According to GWP Test Manager nomenclature, corresponds to a sensitivity test.

Warning limit

An upper or lower limit, which if exceeded or not reached, makes more stringent process monitoring necessary.

Weight tolerances

a) Tolerances of certified test weights or b) Tolerances relating to a weighed weight (e.g. tare weight).

Index

A

AC adapter 26, 27, 153, 154
Actual value 36
Additive mode 89
Additive weighing 89
Adjustment 34, 35, 47, 75, 76
Adjustment data 48
Adjustment records 78
Adjustment report 49
Adjustment with external test weight 76
Adjustment with internal weight 76
Advanced options 47
Ambient conditions 50
Application 14, 61
Applications 17
Application-specific settings
    Configuration 18
Attempt 45
Automatic adjustment 76
Automatic zero correction 50
AutoZero
    Automatic zero correction 50
Aux 1 57
Aux 2 57
Aux connections 169
Aux. liquid 105, 110

B

Backspace 19
Balance functions 183
Balance information 58
Barcode data 70
Barcode reader 70
Battery replacement 43
Beep 54, 137
Beep volume 54
Below-the-balance weighing 30
Blocks the balance 48
Buttons 9

C

Certificate number 36
Certified balances 182
Class 36
Cleaning 148
Configuration
    Application-specific settings 18
Connecting the balance 26, 27
Connecting to power supply 26, 27
Counting 132

D

Data output 69
Date 15, 55
Density application 104, 109
Density determination 104, 105, 107, 109, 114
Density determination method 105
Density kit 104
Density of liquids 116
Density of solids 116
Density statistics 114
Density table for distilled water 117
Density table for ethanol 117
Determination of the density of liquids 111
Determination of the density of non-porous solids 110
Determination of the density of pasty substances 112
Dialog language 51
Dimensions 164
Display 15, 182
Display brightness 54
Display contrast 54
Display dynamic weighing 138
Display of the weight value 182
Display statistical values 86
Display unit 120, 127
Disposal 149
Draft shield door 25
Draft shield glass 25
Dynamic behavior 137
Dynamic weighing 135, 136
Dynamic weighing application 135, 144
Dynamic weighing with automatic start 144
Dynamic weighing with manual start 145

E

EC method 39, 81
Eccentric load deviation 39, 81
Eccentric load test 39, 81
e-Loader II 149
Energy saving function 57

Environmental conditions 153, 154
ErgoSens 57, 169
Error instructions 38
Error messages 151
Example log with statistical values 93, 147
Example protocol 93, 102, 113, 123, 133, 146
Example protocol of a density determination 114
Example protocol of a piece count with statistical values 134
External keyboard 71

F

FACT 46, 75, 76
Factory settings 57
Firmware 17
Firmware update 149
Footer 65
Formulae 116
Formulas 94
Formulation 96, 100
Formulation application 96, 100
Formulation identifications 99
Formulation protocol information 98
Free weighing unit 64
Function key 124
Function keys 16, 61, 62, 75, 85, 96, 100, 106, 110, 111, 112, 118, 125, 136

G

Gamma sphere 104, 112, 116
General safety information 10
Good Weighing Practice 34
GWP history 38, 48
GWP® 34
GWP® Verification 34

H

Hanger opening 104
Header 65

I

Identification 58
Identification number 36
Identification of the weight display 182
Identifications 70, 73, 99
  Activate 70
  Define 70
Info field 70, 183
Info Unit 127
Information fields 16, 62, 97, 100, 110, 111, 112, 119, 126
Information unit 120
Input test 47
Installing the draft shield 23
Intended use 10
Interface 51
  MT-SICS 182
Interface options 53
Internal weight adjustment 46

K

Keyboard entries 71
Keys 9, 28

L

Language 51
Large display 16
Level indicator 27
Leveling 27, 47
Liquid 104
Local conditions 21
Location 21
Log 87, 98, 108, 120, 127, 139
Lot counter 72

M

Manual protocol printout 67
Materials 153, 154
Mean value 94
Measured value 50
Measured value release 50
Method 38, 39, 80, 110, 114
  eccentricity 39
  repeatability 39
  repeatability and tare 40
  sensitivity 42
  sensitivity and tare 43
Minimum weight
  MinWeigh 74
MinWeigh 43
  Minimum weight 71, 74
MT-SICS 182

N

Net weight 68, 142
Net weight icon 68, 142

Nominal value 132
Nominal weight 92, 122
Number of decimal places 106
Number of repetitions 40, 41
Number of warnings 45

O

Option 53
Optional interface 53
Out of zero range 151
Output data 67, 141
Output format 68, 142
Output test 47
Overload 151

P

Parameters 36, 38
Password 18, 56
Pasty substances 104, 116
Percent weighing 118, 119, 120, 121
Percent weighing application 118, 121
Peripheral devices 51
Piece counting 124, 125, 126, 127, 129
Piece counting application 124, 129
Piece weight 130
Power cable 26
Power supply 153
Power supply voltage 26
Pre-warning time 42, 83
Printer settings 183, 184
Printout 183
Protection and standards 153
Protocol 49, 65
Protocol data for piece counting 127
Protocol header 70
  Define 70
Protocol information for density determination 108
Protocol information for percent weighing 120
Protocol printout 72

R

Reference unit quantity 124
Relative standard deviation 94
Release code 38
Releases the balance 48
Reminder 42, 83
Repeatability 39, 40, 81, 82
Repeatability test 39, 81
Repeatability test with tare weight 40, 82
Reset to zero 183
Resolution 72
Result 106
Rights 56
Routine test 35
RP1 method 39, 81
RPT1 method 40, 82
RS232C interface 169

S

Safety information 10
  General 10
  Intended use 10
  Staff safety 10
Sample protocol of a formulation 103
Sample protocol of a percent weighing 123
Scope of delivery 20
Screen saver 16
SE1 method 42, 82
SE2 method 42, 82
Security system 18
Self-test 26, 27
Sensitivity test 42, 43, 82, 83
Series weighings 92
Service 43
SERVICE method 42, 83
SET1 method 43, 83
SET2 method 43, 83
Settings
  Adjustment 35
  System 32
  Tests 35
Simple weighing 28
Sinker 111
SmartTrac 16, 93, 101, 123, 133
Software update 149
Solids 104, 105
Spare Parts 180
Stability detector 28
Staff safety 10
Standard deviation 94
Standby mode 57
Statistics 85, 105, 114, 143
Statistics application 85, 90
Statistics function 105

Statistics recording 92
Status icon 151
Status icons 16
STD 59
Switching on the balance 27
Symbols 9
System settings 32

T

Tare 183
Tare weight 43, 83
Taring 14, 28
Task 46
Task status 46
Task status window 46
Tasks 45
Technical data 153
Temperature criterion 76
Terminal 54
Test 34
Test history 48
Test Manager 34
Test records 78
Test report 49
Test Results 48
Test sequence 37, 42, 45, 46, 80
Test weight 36, 39, 42, 43, 81, 82, 83
  Weight 36
Testing the adjustment with external test weight 77
Testing the adjustment with internal weight 77
Tests 35
Time 55
Tolerance 39
Tolerances 47
Tolerances s 40, 41
Touch screen adjustment 55
Touch screen touch function 55
Touchscreen 15
Transfer key 67
Transport over long distances 30
Transporting over short distances 29
Transporting the balance 29

U

Underload 151
Unit 106
Units of measurement 182
Unpacking 20
Unpacking the draft shield 20

V

Version number 37

W

Warning 44
Warning dialog 44
Warning mode 45
Weighing application 59, 72
Weighing mode 49
Weighing out 92
Weighing pan 23
Weighing parameters 49
Weighing protocols 70, 99
Weighing result 63, 72
Weighing results 74
Weighing unit 16, 63
Weighing-in 122
Weighing-in aid
  SmartTrac 93, 101, 123, 133
Weight
  Test weight 36
Weight value 16

Z

Zero point 28
Zeroing 14, 28

GWP®

Good Weighing Practice™

GWP® is the global weighing standard, ensuring consistent accuracy of weighing processes, applicable to all equipment from any manufacturer It helps to:

- Choose the appropriate balance or scale
- Calibrate and operate your weighing equipment with security
- Comply with quality and compliance standards in laboratory and manufacturing

www.mt.com/GWP

www.mt.com/xs-precision

Further information

Mettler-Toledo AG, Laboratory Weighing
CH-8606 Greifensee, Switzerland
Tel. +41 (0)44 944 22 11
Fax +41 (0)44 944 30 60
www.mt.com

Subject to technical changes.
© Mettler-Toledo AG 08/2015
30134627B en

* 3 0 1 3 4 6 2 7 *