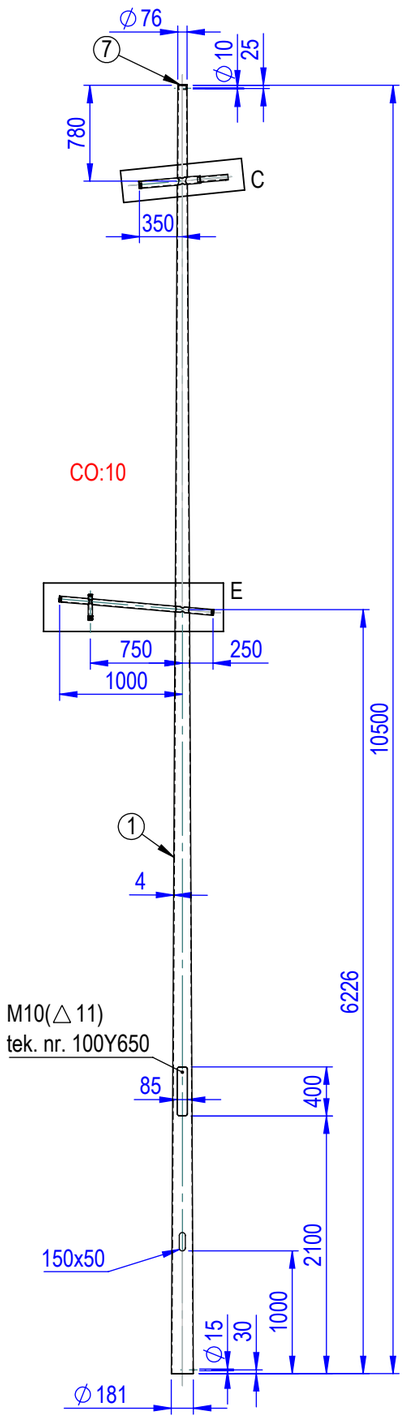

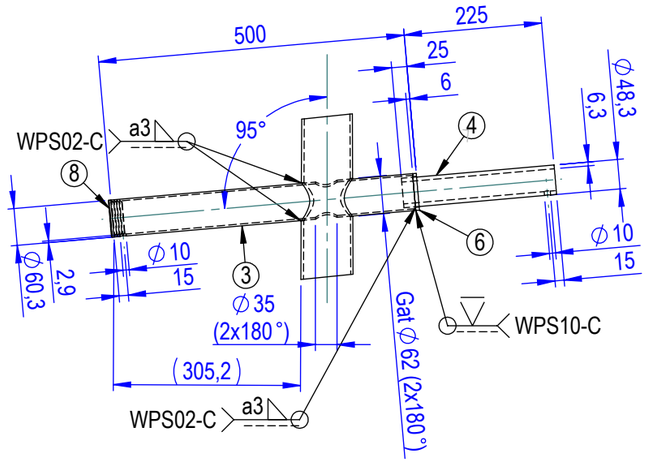

DETAIL C
SCALE 1 : 10

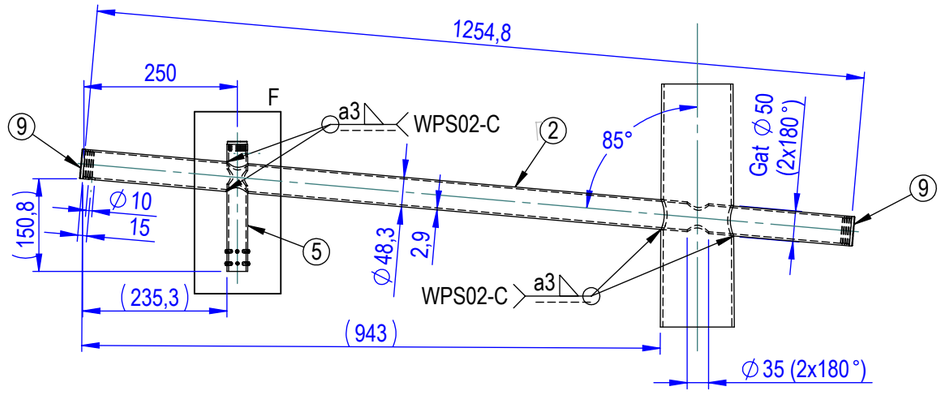

DETAIL E
SCALE 1 : 10

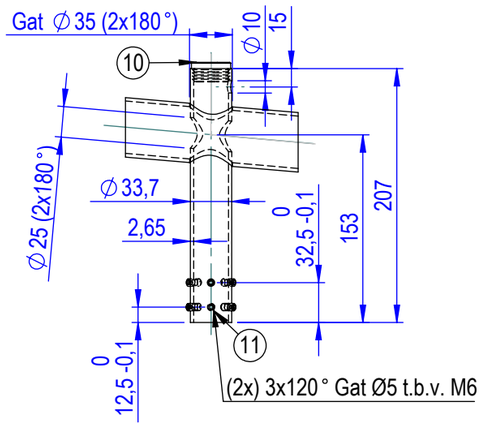

DETAIL F
SCALE 1 : 5

Let op: Buis nr.5 staat evenwijdig aan
het hart van de conische mast

Alle snijdelen volgens: ISO9013-542

Pos	Qty.	Description	Length	Area	Mass	Document Number	Article number
11	6	Stelschroef M6x10 thvz, Plain Carbon Steel			2.268	M6x10 DIN916	407046
10	1	Dop instlam rnd 34x3.25, PA Type 6			11.92	Dop rond 34	211577
9	2	Dop instlam rnd 48x2.9, PA Type 6			33.13	Dop rond 48	035023
8	1	Dop instlam rnd 60x2.9, PA Type 6			0.06	Dop rond 60	035015
7	1	Dop instlam 76x2.9, PA Type 6			82.01	Dop rond 76x2.9	034302
6	1	Lasring Ø60,3xØ50,3x6, 1.0045 (S355JR)		0.0	0.0	200Q282-006	058174
5	1	Buis Ø33,7x2,65, 1.0039 (S235JRH)	207	0.0	0.4	200Q282-007	271200
4	1	Buis Ø48,3x6,3, 1.0039 (S235JRH)	250	0.1	1.6	200Q282-005	000522
3	1	Buis Ø60,3x2,9, 1.0039 (S235JRH)	494	0.2	2.0	200Q282-004	001204
2	1	Buis 48,3x2,9, 1.0039 (S235JRH)	1254,8	0.4	4.0	200Q282-002	001146
1	1	Steel conical pole Ø181 / Ø76, t=4, 1.0039 (S235JRH)	10500	8.2	128.3	200Q282-001	229470

Created By: MvdS	Tolerances acc.: EN 40-2 (Operational Standard)	Overall Tolerances: ISO 2768-V	Material: -	Mass (kg): 136.6	Area (m²): 4.445
Created On: 29-7-2021					
Checked By:	Title: Mast 9m			Coating: -	
Checked On:					
Description: Mast 9m				Part No.: 530005	
				Welding class: EXCII	Sheet No.: 2/4
Remark: Strength Calc. acc.: EN40, WG3, TC2, KL2. Max. arm. M=15kg, Cxs=0,293m²		Document Number: 200Q282-100			Revision: x
valmont structures	Projection Type:	Format: A3	Scale: 1:50	Note: Dimensions in millimeter	Revision Note: -

THIS DRAWING IS THE PROPERTY OF VALMONT NETHERLANDS B.V. USE OF THIS DRAWING WITHOUT PERMISSION, COPIED OR GIVEN TO THIRD PARTIES FOR INSPECTION IS PROHIBITED, COPYRIGHTS ARE RESERVED ACCORDING TO THE LAW.

Valmont Nederland BV
Den Engelsman 3
6026 RB Maarheeze
The Netherlands
T: (+31) 495 599 959
F: (+31) 495 591 781
www.valmont.nl
info.nl@valmont.com