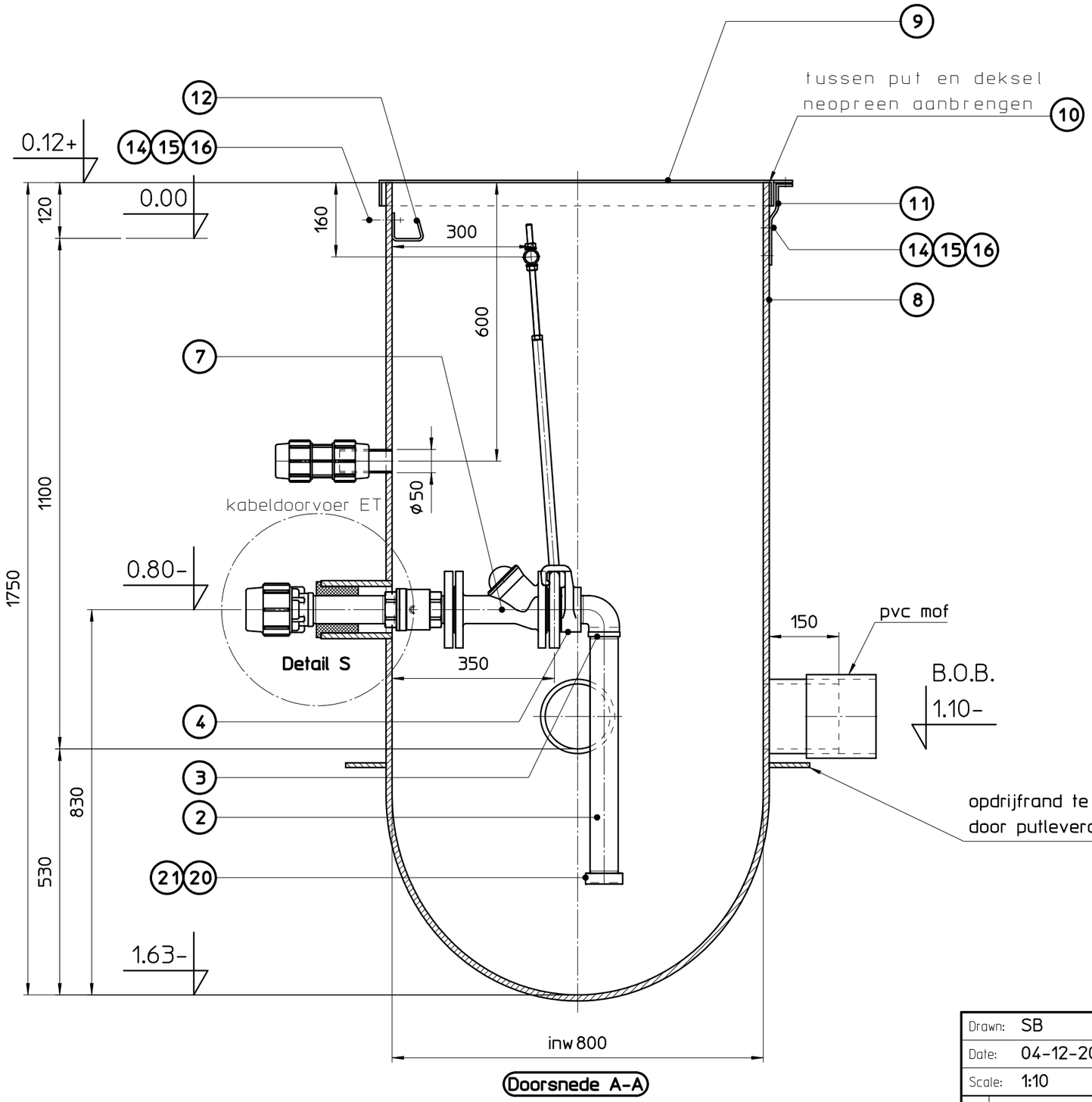

Doorsnede A-A

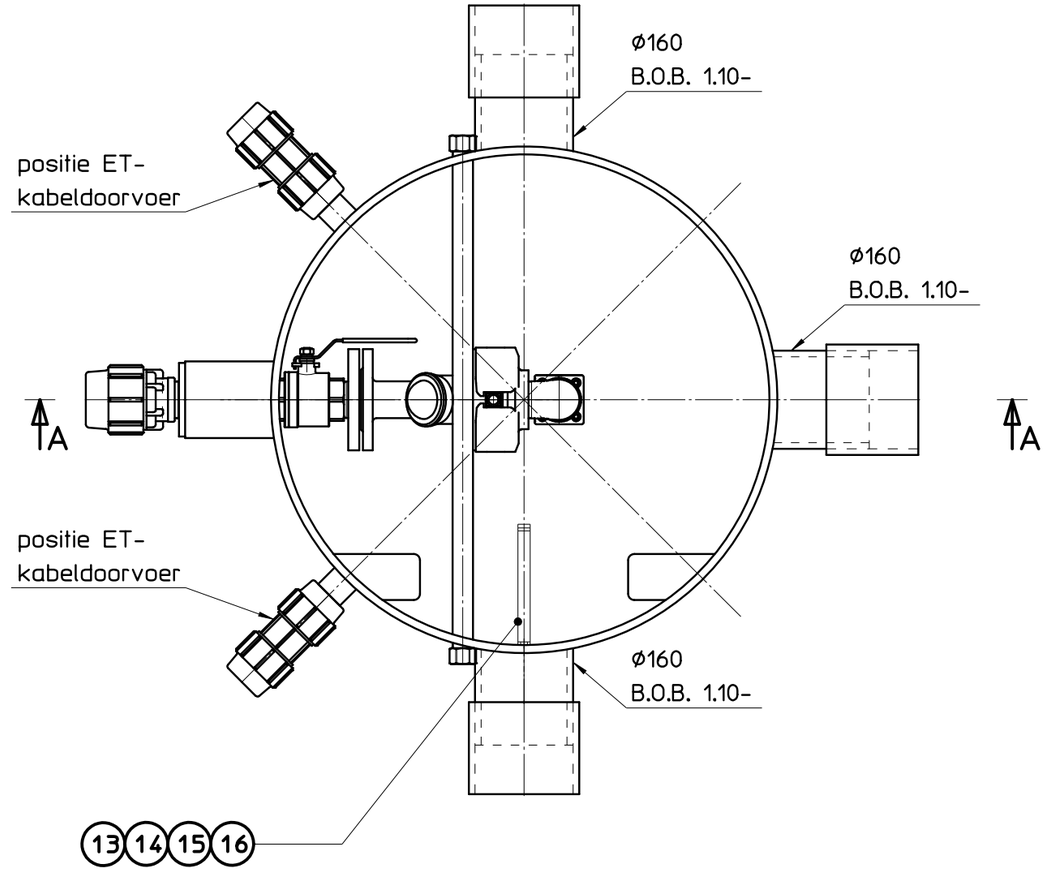

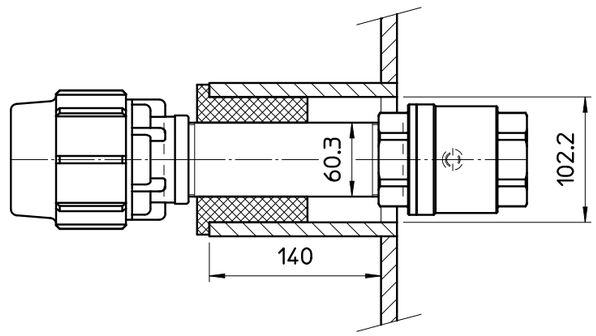

Detail S
schaal 1:5

Drawn: SB	A3	Subject:	KUNSTSTOF DRG. ROND 800
Date: 04-12-2018			
Scale: 1:10			
Revised		Project:	

Unless otherwise stated:	Projectnr.	Stat.	Inst.	Nr.	Rev.
Break edges Burrs removed Tolarances according: NEN-ISO 2768	-	-	-	-	-
	From standard:		Status: released		

Landustrie

Landustrie Sneek bv.
Pieter Zeemanstraat 6
P.O. box 199
8600 AD Sneek

Phone: +31(0)515-486888
Fax: +31(0)515-412398
www.landustrie.nl
info@landustrie.nl

This drawing is our property and may not be copied, multiplied, shown to third parties, nor used for manufacturing purposes on behalf of third parties, without our written approval.

Filename: 00091938