COMPARTMENT 1

3N∿ 60Hz/TN-C-S 480/277V

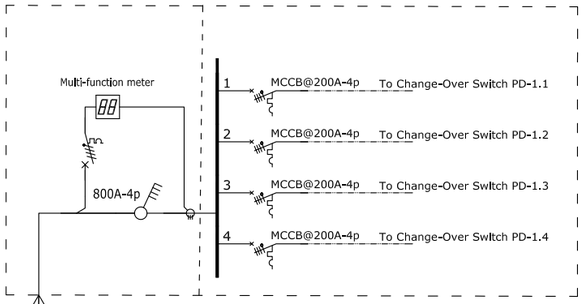

167kVA
167kVA
167kVA
167kVA

TOTAL Connected: 668kVA

Est. Expected - 60%: 400kVA (±480Amp)

4x 2x YMvK-mb 1x240mm2 from SEC LV-480/277V - ± 15mtr

COMPARTMENT 2

CHANGE-OVER SWITCHES

COMPARTMENT 3

3N∿ 60Hz/TN-C-S 220/127V

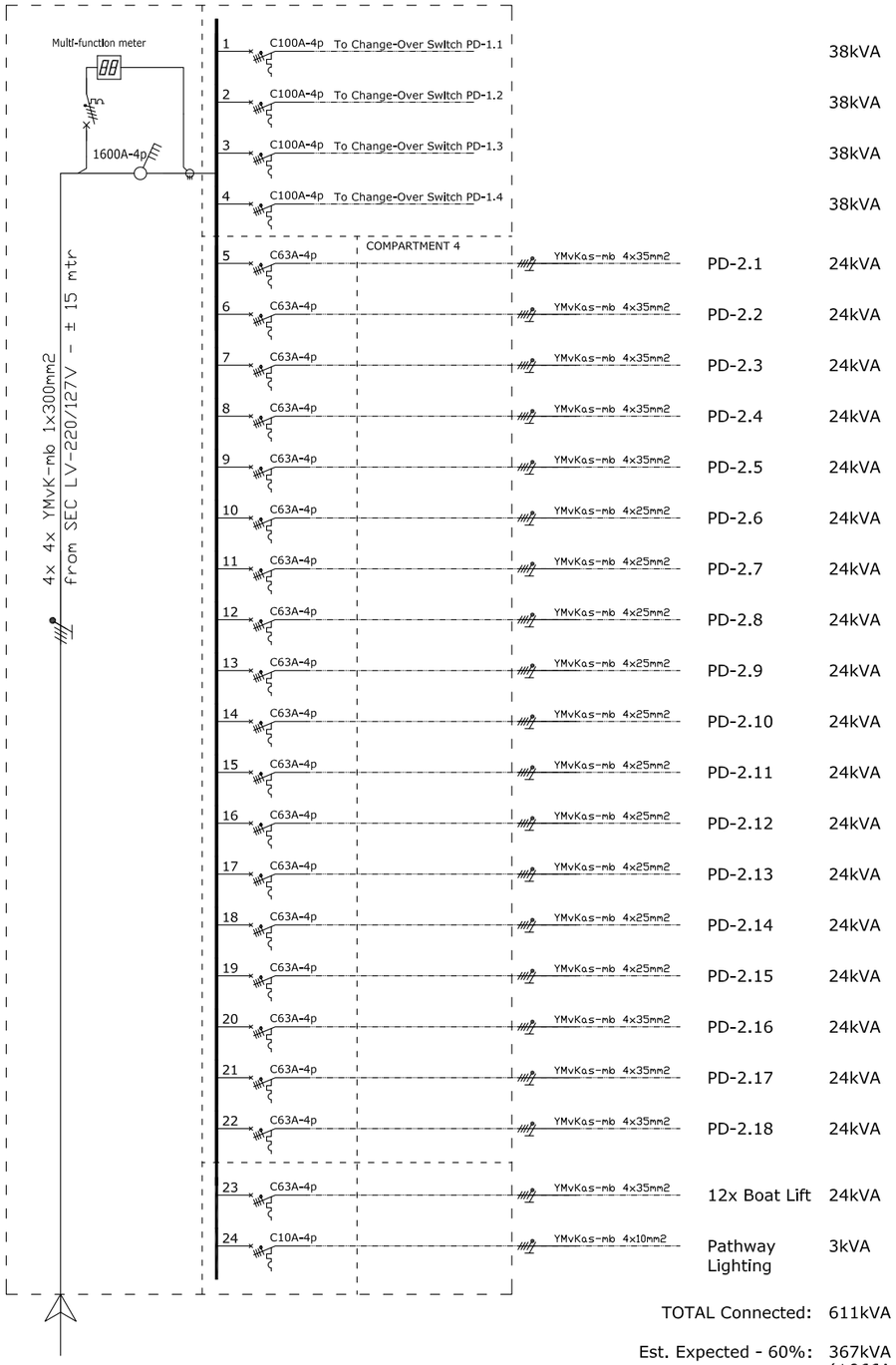

TOTAL Connected: 611kVA

Est. Expected - 60%: 367kVA (±966Amp)

COMPARTMENT 1

480/277V-3Ph-N-PE
TN-C-S

480/277V FEED from Low-Voltage (LV) Rack Utility Company SEC

Main Disconnect 480/277V

Multi-function Meter Total 480/277V Load

Protection Devices 480/277V Loads (4x)

COMPARTMENT 2

Change-Over Switches for Dual Voltage Pedestals (4x)

FEEDS to Dual Voltage Pedestals

Each Pedestal is fed with either 480/277V -or- 220/127V

Voltage Meters for Each Load

COMPARTMENT 3

220/127V-3Ph-N-PE
TN-C-S

220/127V FEED from Low-Voltage (LV) Rack Utility Company SEC

Main Disconnect 220/127V

Multi-function Meter Total 220/127V Load

Protection Devices 220/127 Loads (24x)

COMPARTMENT 4 CABLE COMPARTMENT

FEEDS to 220/127V Loads

See Drawing EP-1000b - Typical View

ALTERNATIVE DESIGN OPTION

Points of Departure:

- Utility Company (SEC) supplies 1x transformer for 220/127V power
  - -- Power requirement currently estimated at ±1000A-3ph (380kVA)
  - -- Transformer shall feed all single voltage pedestals, boat lifts and Mega Yacht dock lighting
- Utility Company (SEC) supplies 1x transformer for 480/277V power
  - -- Power requirement currently estimated at ±500A-3ph (416kVA)
  - -- Transformer shall feed the Mega Yacht pedestals.
- Network shall be executed as a TN-C-S system
- The Estimated/Expected Demand Power is set @ 60% of the Connected Load.

- The Loads shall be fed from 1 Main Distribution Board (MDB):
  - -- To be located near dock in protective structure to limit cable lenghts to pedestals
  - -- Compartment 1: incoming 480/277V feed from SEC and protection devices for 480/277V-loads (dual voltage pedestals)
  - -- Compartment 2: change-over switches for dual voltage pedestals and outgoing feeders to these pedestals
  - -- Compartment 3: incoming 220/127V feed from SEC and protection devices for 220/127V-loads (single voltage pedestals, boats lifts & dock lighting)

- The 4 "Mega Yatch" pedestals shall be dual voltage:
  - -- Only 1 power source can be used at a time
  - -- Max. available capacity @480/277V is 200A-3ph
  - -- Max. available capacity @220/127V is 100A-3ph

- The remaining pedestals shall be single voltage:
  - -- Pedestals per ATM design except for the power feed & available power capacity
  - -- Max. available capacity per pedestal is 63A-3ph @220/127V

DRAFT

Location: Saba, Dutch Caribbean

Project: Black Rocks Harbour

Principal: "Saba Harbour Project"

Drawing: EP-1000a | Project #: 2021 005

Discipline: Electrical

Subject: Main Distribution Board - Schematic

Revision	Date:	By:	Revision notes:

Date:	Drawn by:	Checked by:	Format:	Scale:
19-Nov-2021	JT	CB	A3	n/a

■ For approval ☐ Final ☐ Construction ☐ As-built

Caribbean Engineering & Consultancy Company
CECC Engineering
Grounddove Road #19
Point Blanche
St. Maarten
Fax: +1721-5423057
Phone: +1721-5423058
info@ceccnv.com
www.ceccnv.com