Verbinding PLC-SCL – GCO1@DG-P1 (24v, 2 tubes12v)
- tube 1 (E2000, HF) **PLC-SCL/P1 – CSO/Tube 7/P3**
- tube 2 (e2000, HF) **PLC-SCL/P1 – P7/Tube 2/RING2-DGW**

Verbinding NMA-A@PLC - GCO1@DG-P2 (96v, 8 tubes12v)
- tube 1 (LC-LC) **NMA-A/P2 – P3/Tube 3/CSO**
- tube 2 (LC-LC) **NMA-A/P2 – P3/Tube 4/CSO**
- tube 3 (LC-LC) **NMA-A/P2 – P3/Tube 5/CSO**
- tube 4 (LC-LC) **NMA-A/P2 – P3/Tube 6/CSO**
- tube 5 (LC-LC)**-NMA-A/P2 - P7/Tube 1/RING2-DGW**
- tube 6 (LC-LC)**-NMA-A/P2 - P7/Tube 4/RING2-DGW**
- tube 7 (LC-LC) **NMA-A/P2 – P8/Tube 1/OHK**
- tube 8 (LC-LC) **NMA-A/P2 – P8/Tube 4/OHK**

Note: Er worden 12 vezels t.b.v. HF gerealiseerd over LAN Tube 8 tussen NMA-B@VW en PLC-SCL

Verbinding NMA-B@VW – GCO2@DG-P2 (96v, 8 tubes12v)
- tube 1 Gereserveerd (LC-LC) NMA-B/P1 -/P3 2e verb CSO -
- tube 2 Gereserveerd (LC-LC) NMA-B/P1 -/P3 2e verb CSO
- tube 3 Gereserveerd (LC-LC) NMA-B/P1 -/P3 2e verb CSO
- tube 4 Gereserveerd (LC-LC) NMA-B/P1 -/P3 2e verb CSO
- tube 5 (LC-LC)**-NMA-B/P1 – P2/Tube 1/RING1-DGW**
- tube 6 (LC-LC)**-NMA-B/P1 – P2/Tube 4/RING1-DGW**
- tube 7 (leeg)
- tube 8 (HF, doorlas) **NMA-B/P1 – P5/Tube 2/RING1-DGW**

Verbinding CSO-GCO1@DG-P3 (96v, 8 tubes12v)
-tube 1 (e2000) **CSO/P3 – P6/Tube 1/Busstation Noord**
-tube 2 (e2000) **CSO/P3 – P6/Tube 2/Busstation Noord**
-tube 3 (LC-LC) **CSO/P3 – P2/Tube 1/NMA-A**
-tube 4 (LC-LC) **CSO/P3 – P2/Tube 2/NMA-A**
-tube 5 (e2000) **CSO/P3 – P2/Tube 3/NMA-A**
-tube 6 (e2000) **CSO/P3 – P2/Tube 4/NMA-A**
-tube 7 (e2000, HF) **CSO/P3 – P1/Tube 1/ PLC-SCL**
-tube 8 (e2000, HF) **CSO/P3 - P7/Tube 3/RING2-DGW**

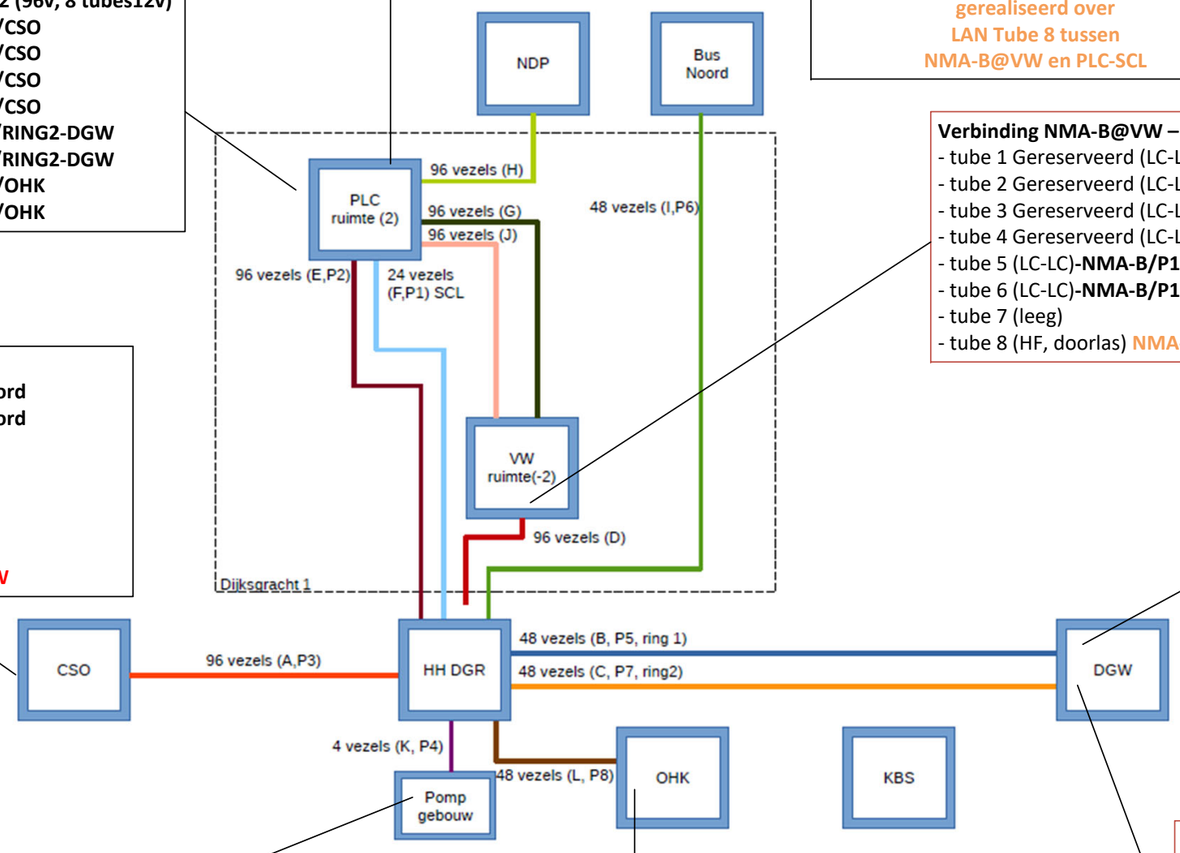

Verbinding DGW RING1 – GCO2@DG-P1 (48v, 4 tubes12v)
- tube 1 (E2000) **DGW-RING1/P2 – P1/Tube 5/NMA B**
- tube 2 (E2000, HF)-**DGW-RING1/P5 – P2/Tube 8/NMA-B**
- tube 3 Gereserveerd (e2000, HF) DGW-RING1/P5 -/P3 2e verb CSO/P3
- tube 4 (LC) **DGW-RING1/P2 – P1/Tube 6/NMA B**

Verbinding DGW RING2 – GCO1@DG-P7 (48v, 4 tubes12v)
- tube 1 (E2000) **DGW-RING2/P7 - P2/Tube 5/NMA A**
- tube 2 (E2000, HF)-**DGW-RING2/P7 - P1//Tube 2/PLC-SCL**
- tube 3 (E2000, HF) **DGW-RING2/P7 - P3/Tube 8/CSO**
- tube 4 (LC) **DGW-RING2/P7 - P2/Tube 6/NMA A**

Verbinding Pompgeb – GCO1@DG-P4 (4v)
- tube 1 (E2000/LC?) **Pompgeb/P4 – P8/Tube 3/OHK**

Verbinding OHK – GCO1@DG-P8 (48v, 4 tubes12v)
- tube 1 (E2000/LC?) **OHK/P8 – P2/Tube 7/NMA-A**
- tube 2
- tube 3 **(LC-LC) OKH/P8 – P4 Pompgebouw**
- tube 4 (LC-LC) **OHK/P8 – P2/Tube 8/NMA-A**