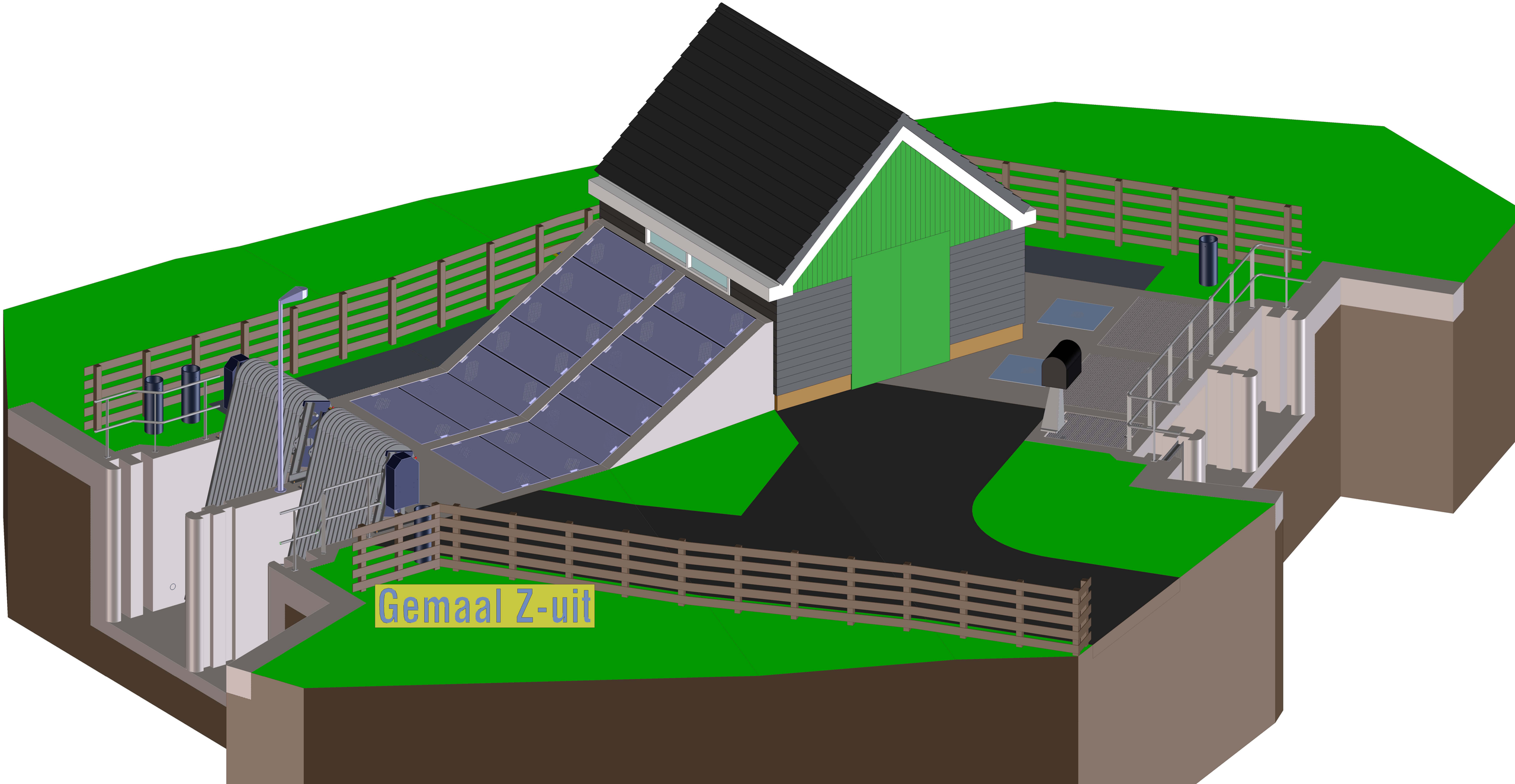
Gemaal Z-uit

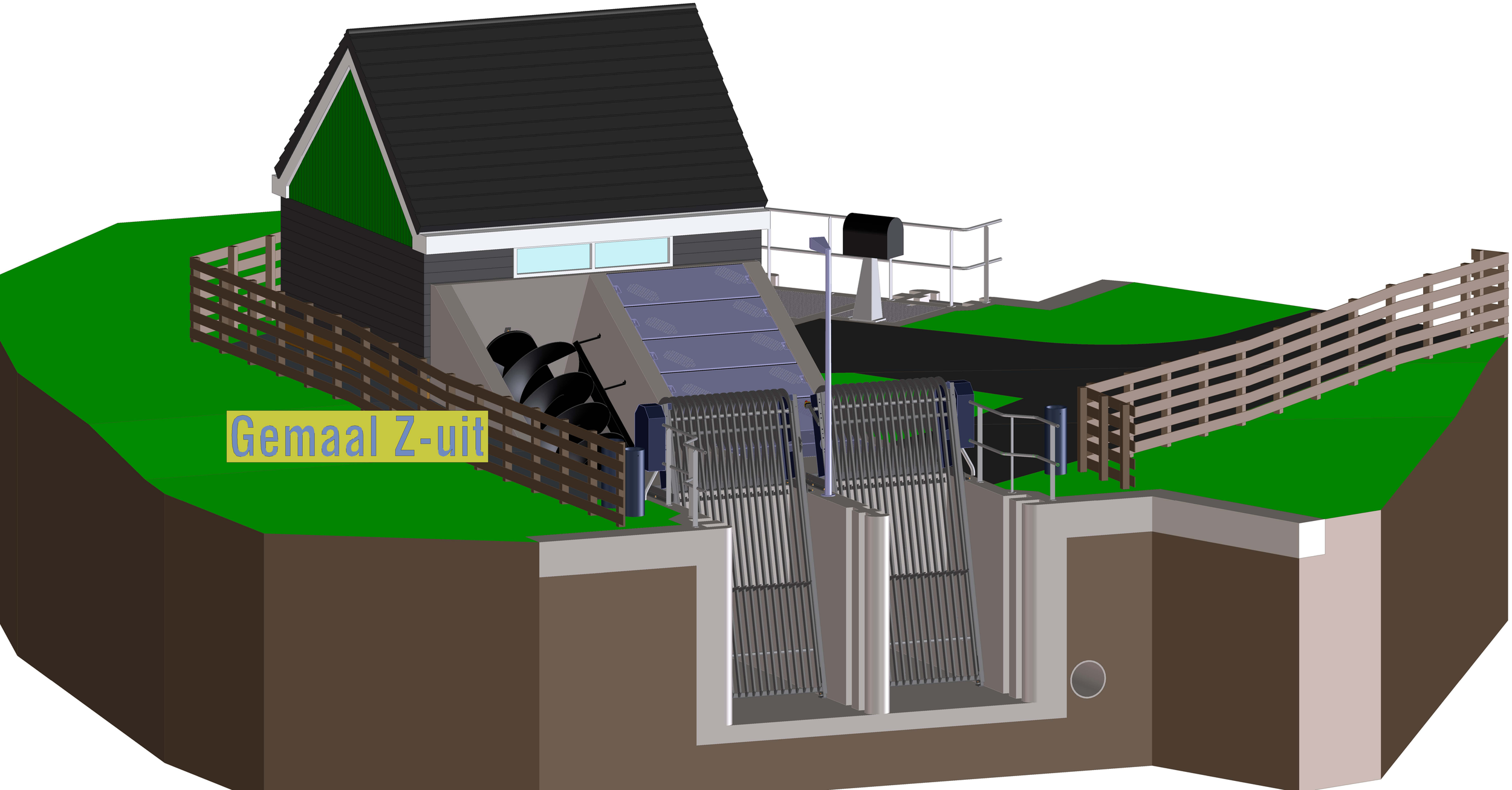
Gemaal Z-uit

Gemaal Z-uit

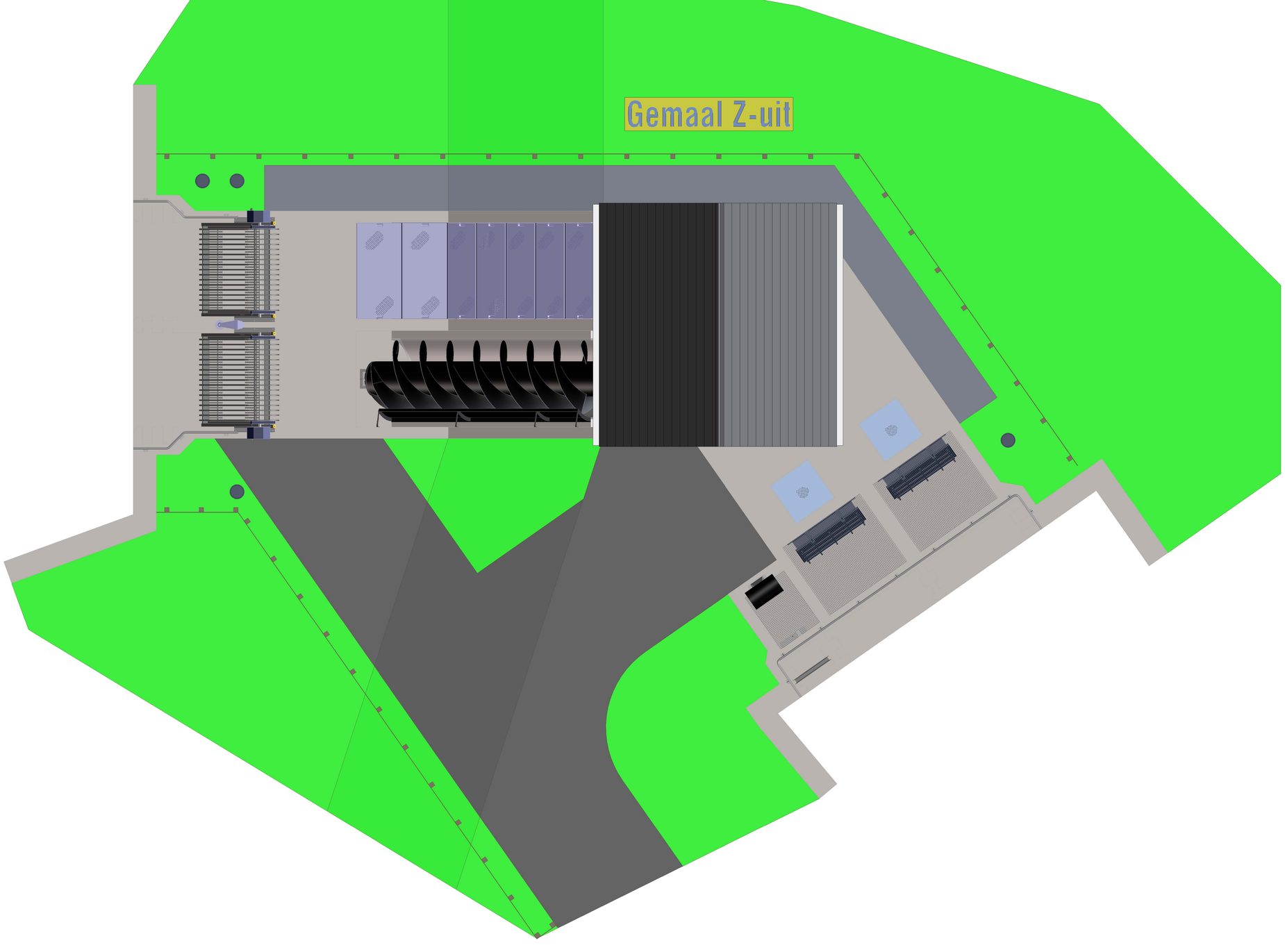
Gemaal Z-uit

Gemaal Z-uit

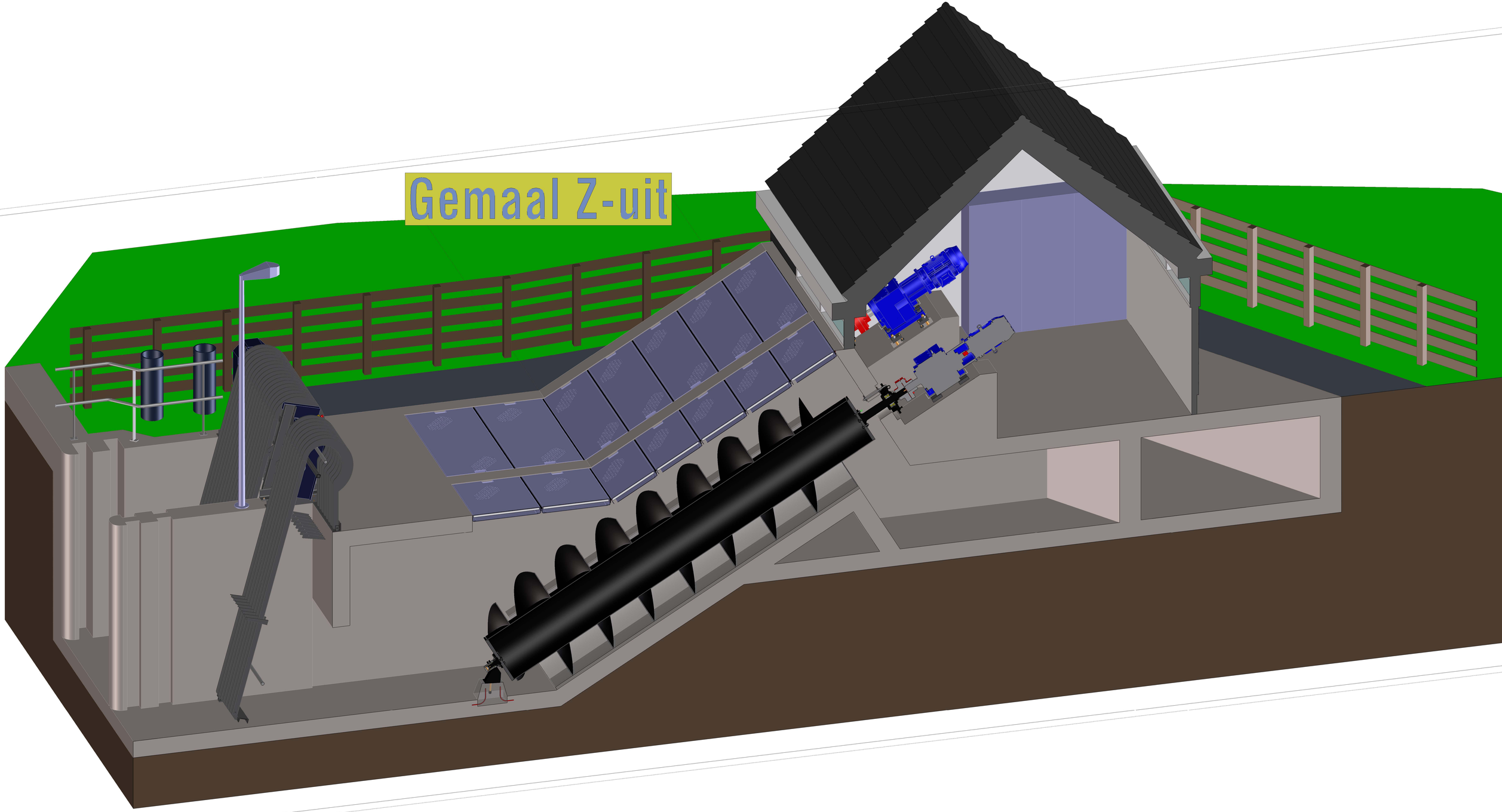

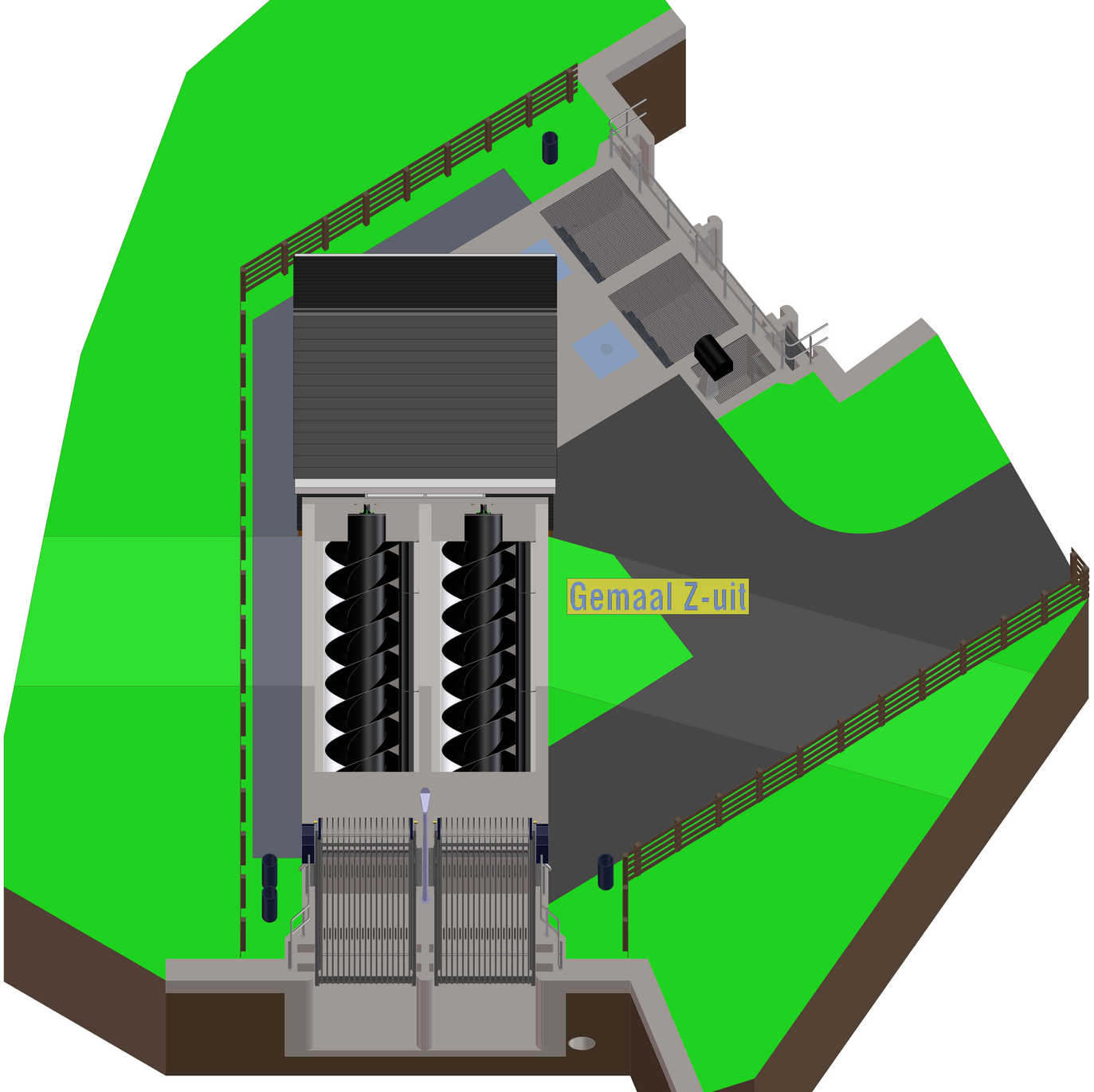
Gemaal Z-uit

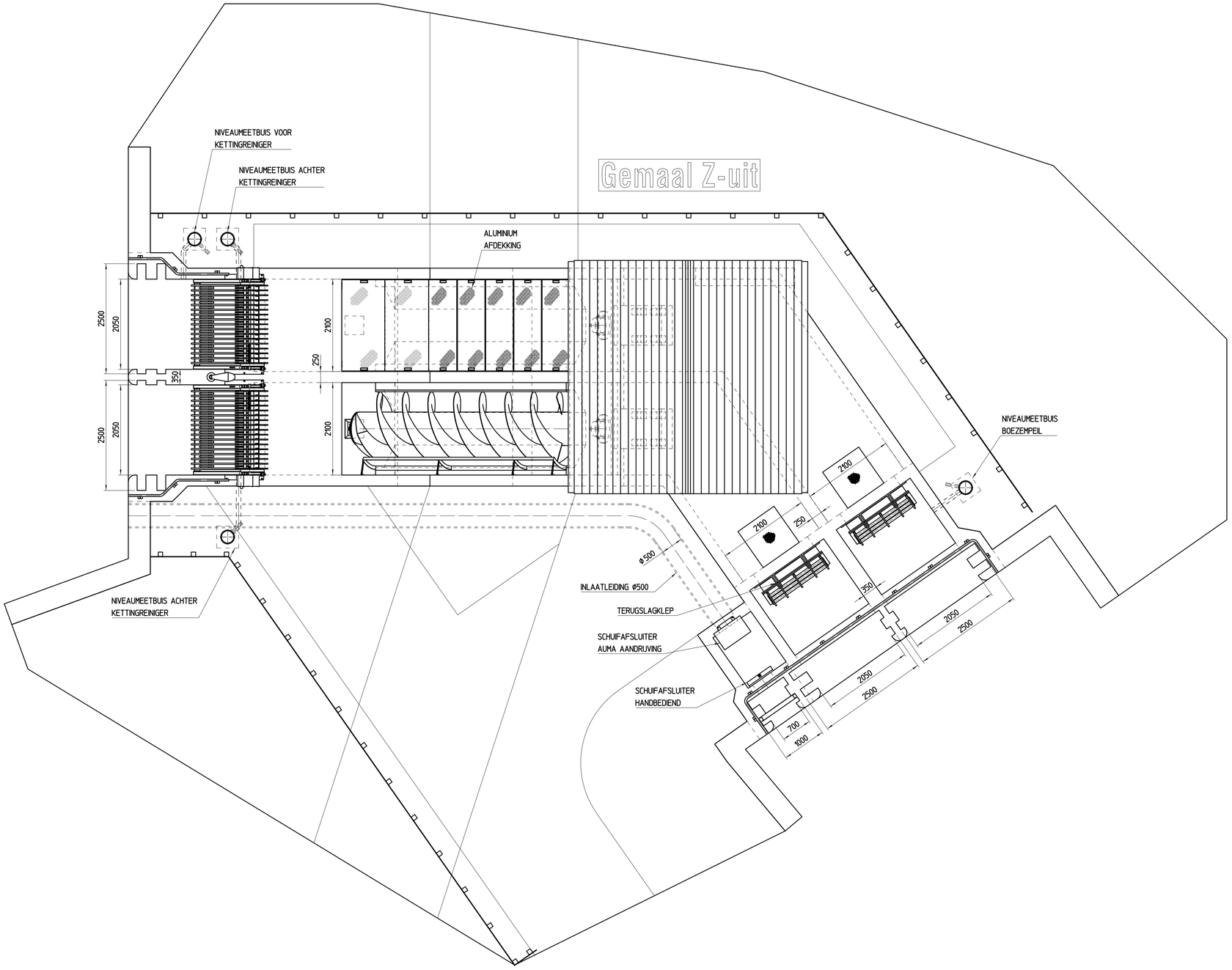

Drawn:	A1	Subject: GEMAAL Z-UIT BOVENAANZICHT
Date:		
Scale: 1:50		Project: H12/AE1009
Revised		

Landustrie

Landustrie Sneek bv.
Pieter Zeemanstraat 6
P.O. box 199
8600 AD Sneek

Phone: +31(0)515-486888
Fax: +31(0)515-412398
www.landustrie.nl
info@landustrie.nl

Unless otherwise stated:
Break edges
Burrs removed
Tolerances according:
NEN-ISO 2768

Projectnr.	Stat.	Inst.	Nr.	Rev.
-	-	-	-	

From standard: | Status:

This drawing is our property and may not be copied, multiplied, shown to third parties, nor used for manufacturing purposes on behalf of third parties, without our written approval.

Filename:

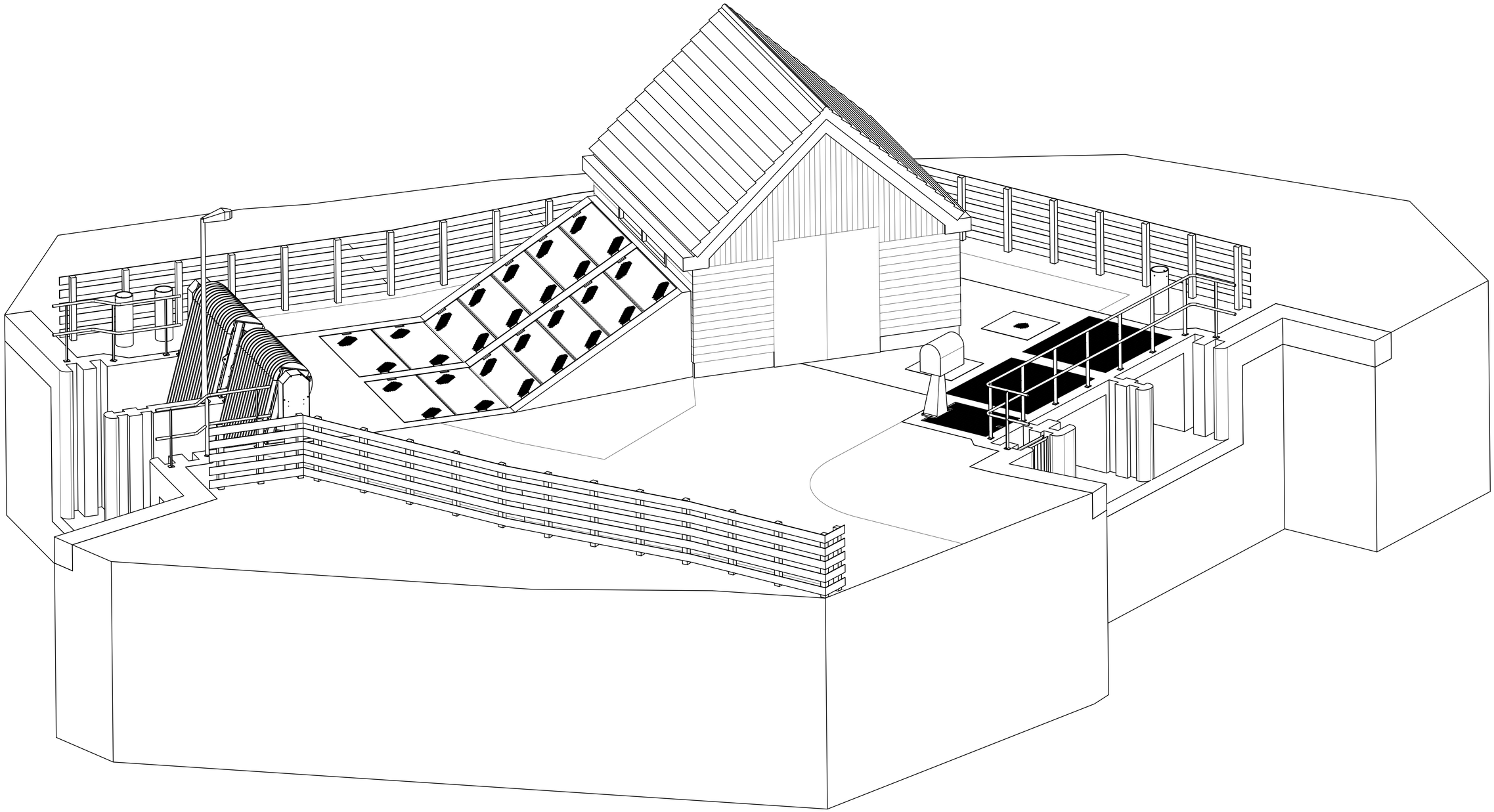

Drawn:	A1	Subject: GEMAAL Z-UIT ISOMETRISCH AANZICHT
Date:		
Scale: 1:50		Project: H12/AE1009
Revised		

Landustrie

Landustrie Sneek bv.
Pieter Zeemanstraat 6
P.O. box 199
8600 AD Sneek

Phone: +31(0)515-486888
Fax: +31(0)515-412398
www.landustrie.nl
info@landustrie.nl

Unless otherwise stated:
Break edges
Burrs removed
Tolerances according:
NEN-ISO 2768

Projectnr.	Stat.	Inst.	Nr.	Rev.
	-	-	-	-

From standard: | Status:

This drawing is our property and may not be copied, multiplied, shown to third parties, nor used for manufacturing purposes on behalf of third parties, without our written approval.

Filename:

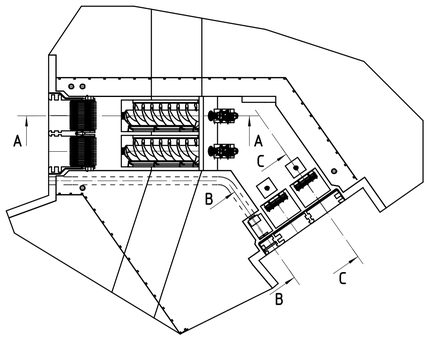

BOVENAANZICHT

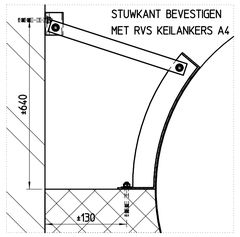

DETAIL STUWKANT
NIET OP SCHAAL

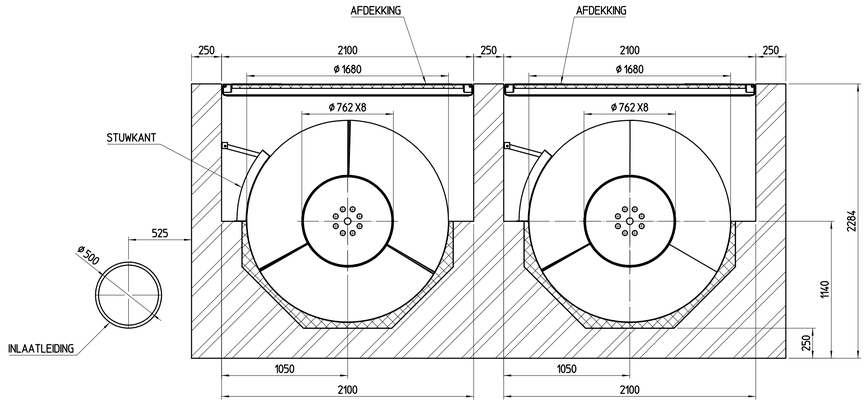

DOORSNEDE D-D
SCHAAL 1:25

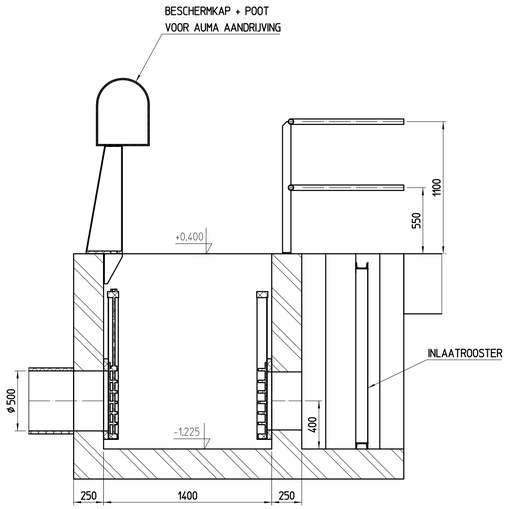

DOORSNEDE B-B
SCHAAL 1:25

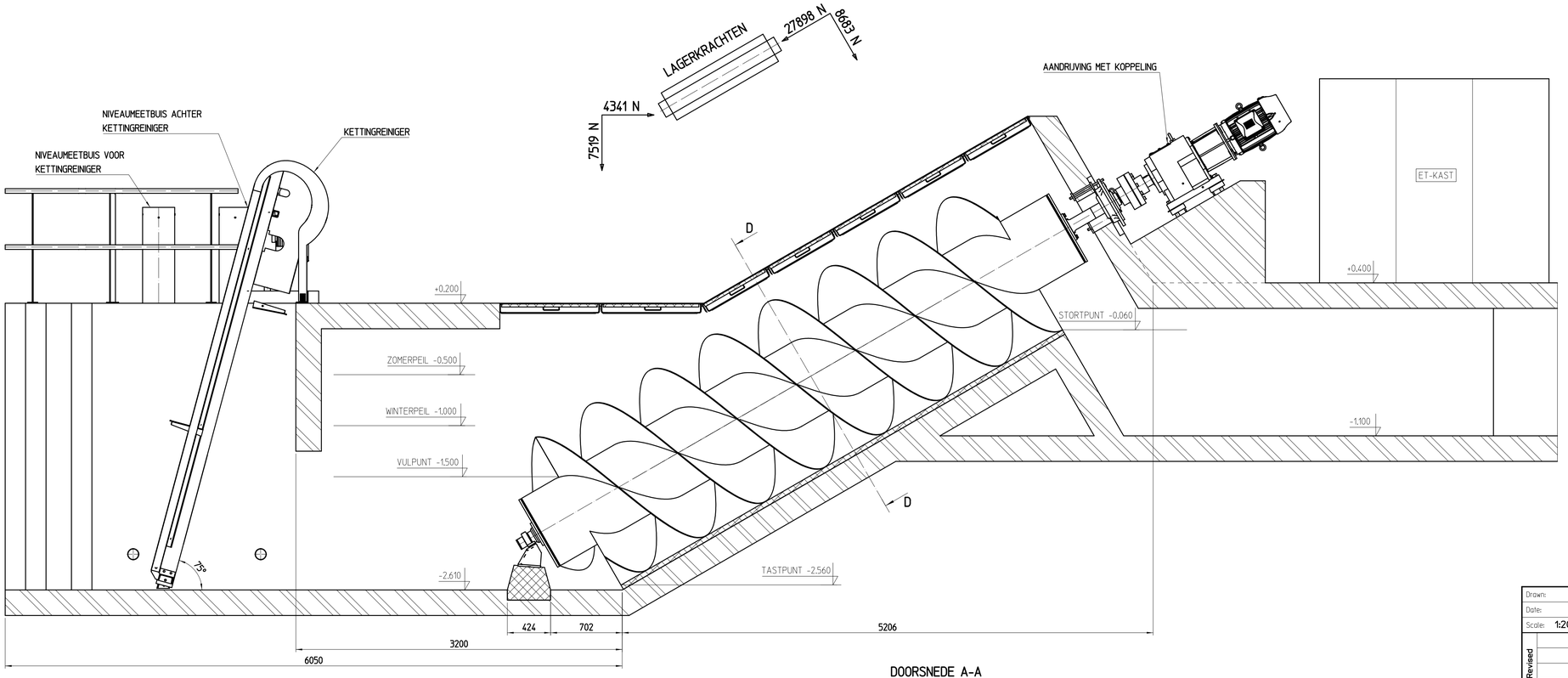

DOORSNEDE A-A
SCHAAL 1:25

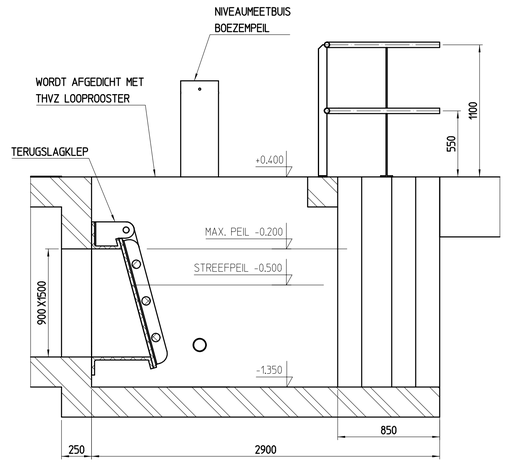

DOORSNEDE C-C
SCHAAL 1:25

Drawn:	A1	Subject: GEMAAL Z-UIT DOORSNEDES
Date:		
Scale: 1:200		Project: H12/AE1009
Revised		

Landustrie

Landustrie Sneek bv.
Pieter Zeemanstraat 6
P.O. box 199
8600 AD Sneek

Phone: +31(0)515-486888
Fax: +31(0)515-412398
www.landustrie.nl
info@landustrie.nl

Unless otherwise stated:
Break edges
Burrs removed
Tolerances according:
NEN-ISO 2768

Projectnr.	Stat.	Inst.	Nr.	Rev.
-	-	-	-	-

From standard: | Status:

This drawing is our property and may not be copied, multiplied, shown to third parties, nor used for manufacturing purposes on behalf of third parties, without our written approval.

Filenaam