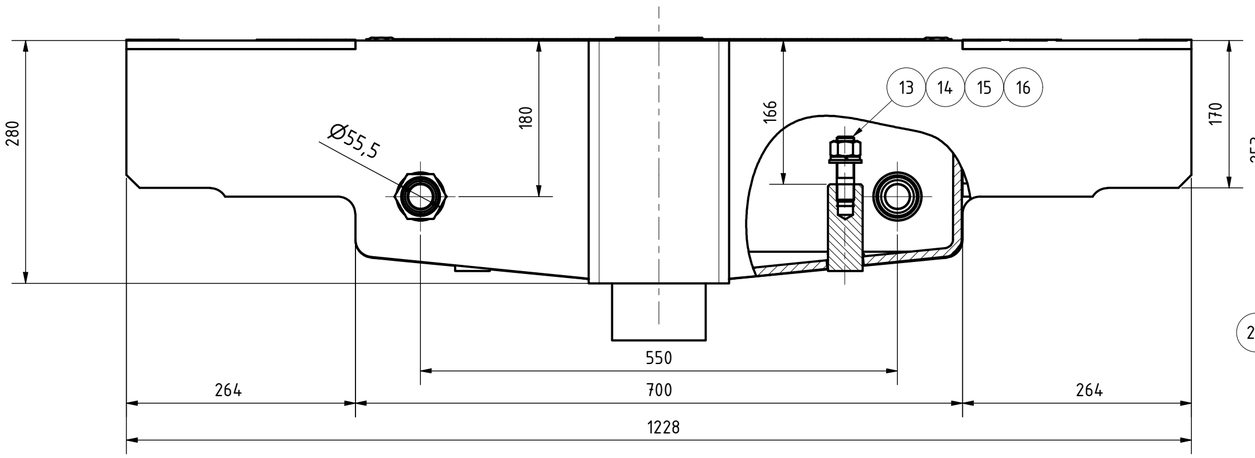

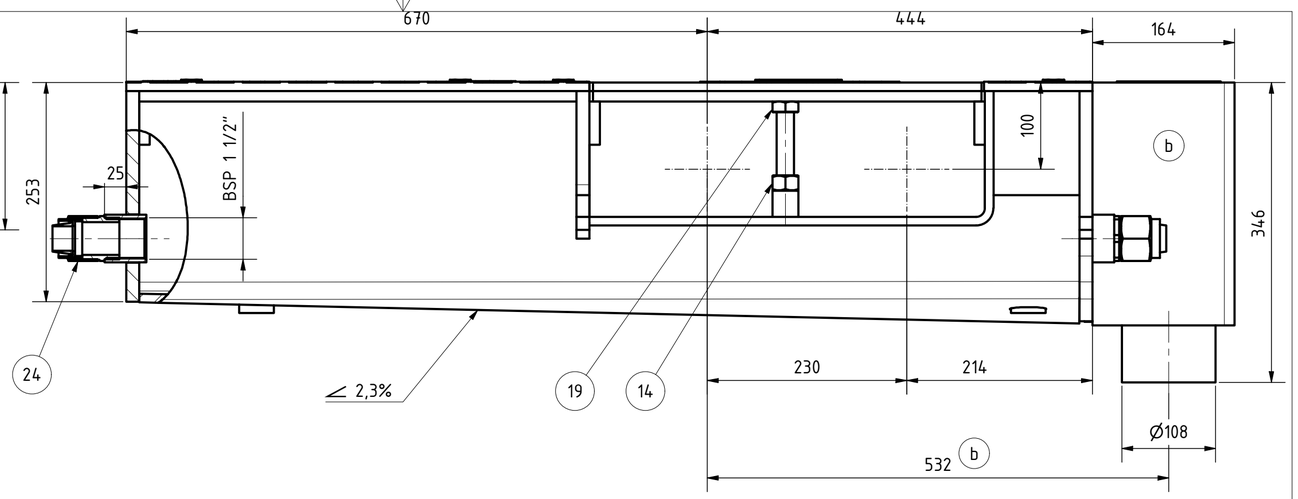

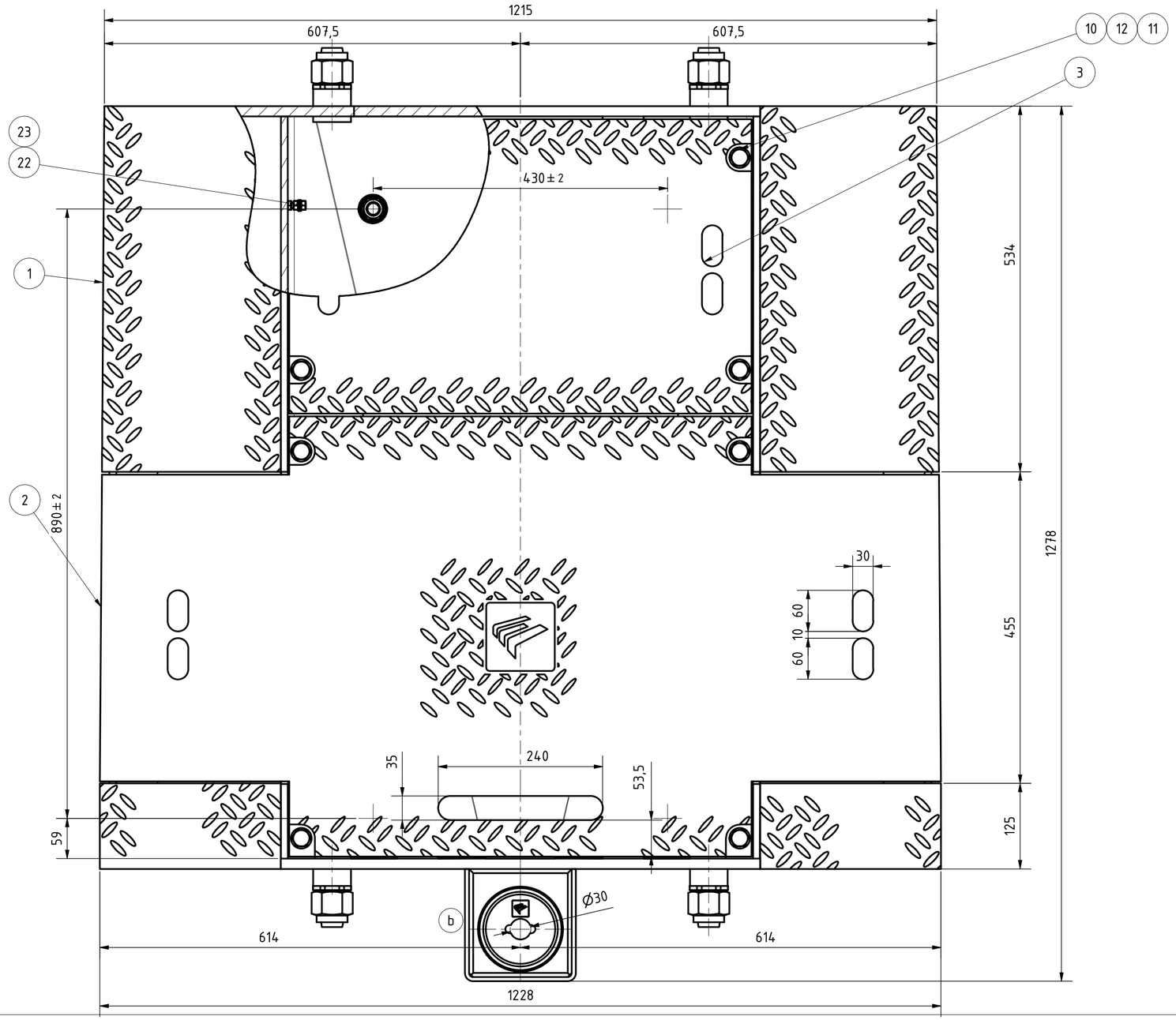

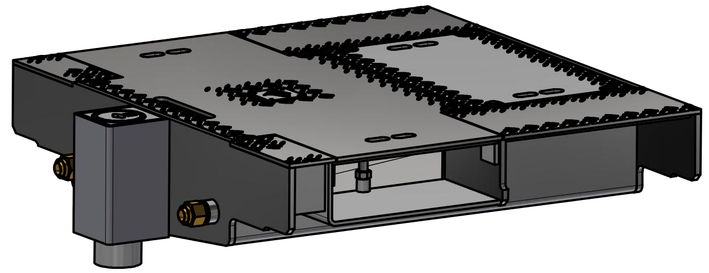

Pcs.	Title	Raw material	Material	Product No.	Drawing No.	Rev.	Pos.
4	Connection 1 1/2" for hose 40mm			Subd.			24
2	Washer 8	ISO 7089/DIN 125	A2	960140			23
2	Nut M8	ISO 4032/DIN 934	A2	940050			22
2	Screw M20 x 120	ISO 4014/DIN 931	FeZn	902704			19
4	Washer 20	ISO 7089/DIN 125	A2	970025			16
4	Washer 20	DIN 127	A2	970021			15
6	Nut M20	ISO 4032/DIN 934	A2	940170			14
4	Screw M20 x 55	DIN 939	A2	902685			13
8	Nut M16	Prism 25x25	CW617N	940158	4.93.100.10.3578	-	12
8	Washer 16	ISO 7089/DIN 125	A2	960280			11
8	Screw M16 x 45	ISO 4017/DIN 933	A2	902610			10
1	Cover of drainage GVB		422425	657000.09		-	8
1	Cover II. GVB	Weldment	-	657085.03	3.93.152.03.4759	-	3
1	Cover I.	Weldment	-	657085.02	3.93.152.02.4391	B	2
1	Ground box ZS 100-T - weldment	Weldment	-	657085.01	0.93.152.01.296	B	1

Issue	Change	Date	Sign.
b	PZ-2020002	27.5.2020	Moravec
a	PZ-2019034	16.4.2019	Moravec

ISO 2768-mK

Material: -
Raw. mat: Assembly
Weight: 384,508 kg

Elektroline
K Ládví 1805/20
184 00 Praha 8
www.elektroline.cz
tel: +420 284 021 111
fax: +420 284 021 119
info@elektroline.cz

Scale 1:5	Product 657085	Designed by:	Moravec
		Drawn by:	Moravec
	Inventor 2020	Verifed by:	Moravec
Previous Drawing	2.93.152.00.1567		
Models file	93.152.00 ZS 100 - Amsterdam 2020.iam	Date	07.01.2020
Drawings file	93.152.00.1469_EN - 2020.idw	Approved by:	Moravec

Ground box ZS 100-T/ GVB

2.93.152.00.1469

B

Number of pages: 1 Page: 1 Rev.