G-G
1:2

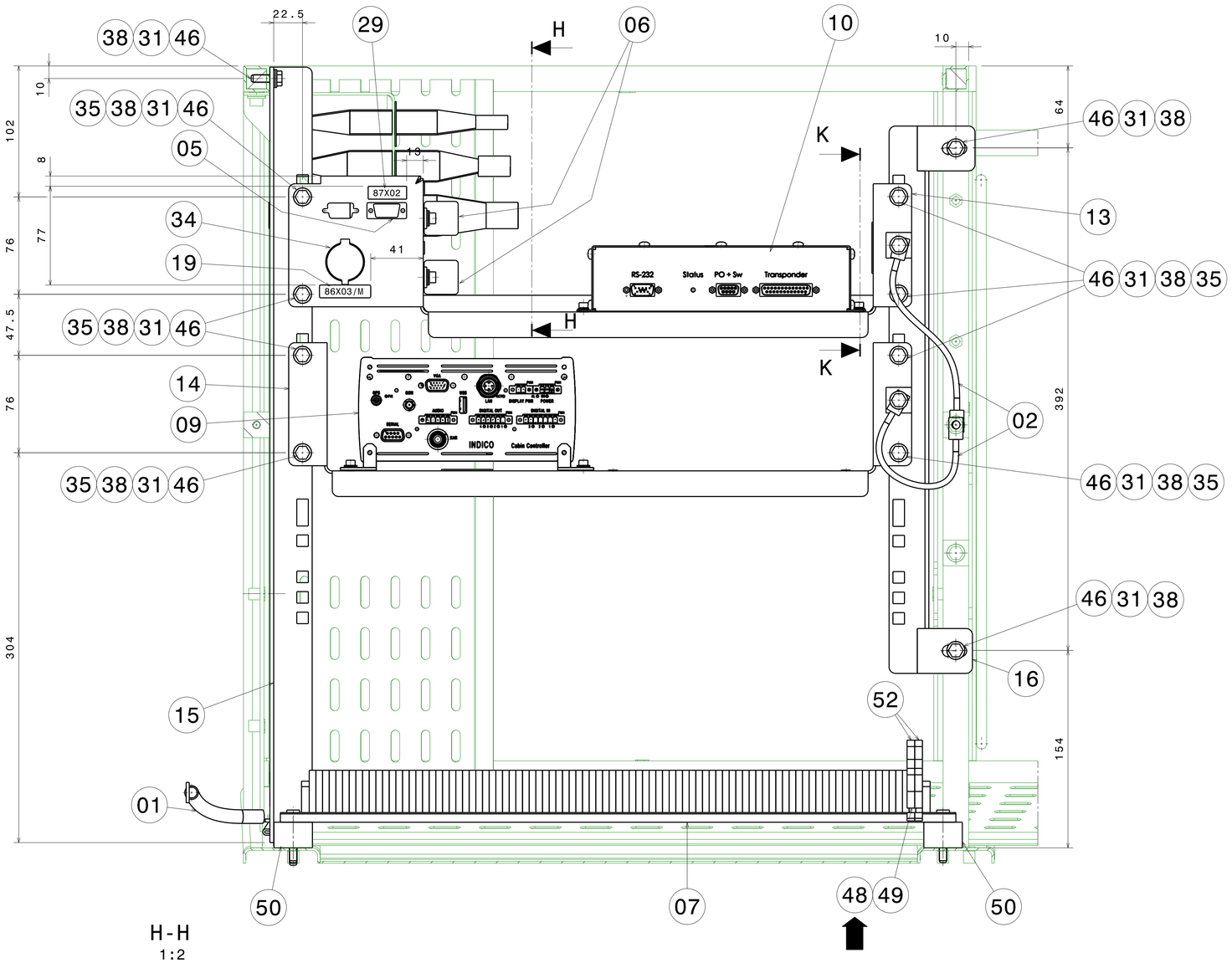

F-F
1:2

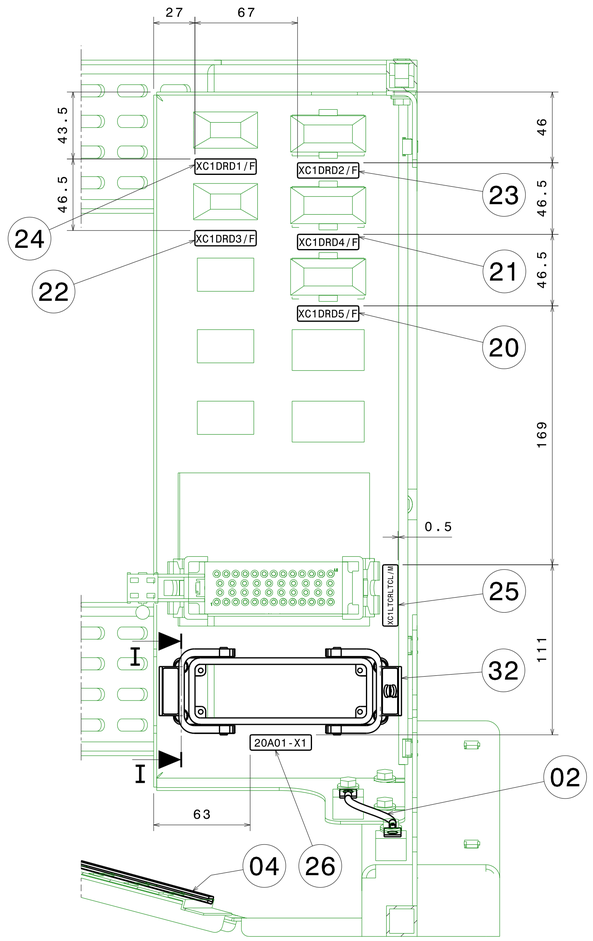

H-H
1:2

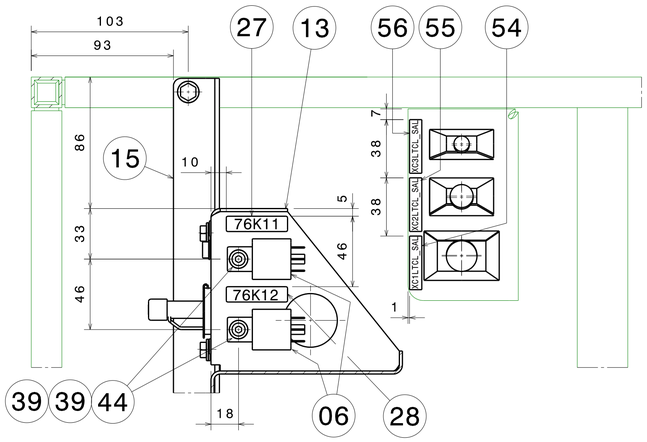

K-K
1:2

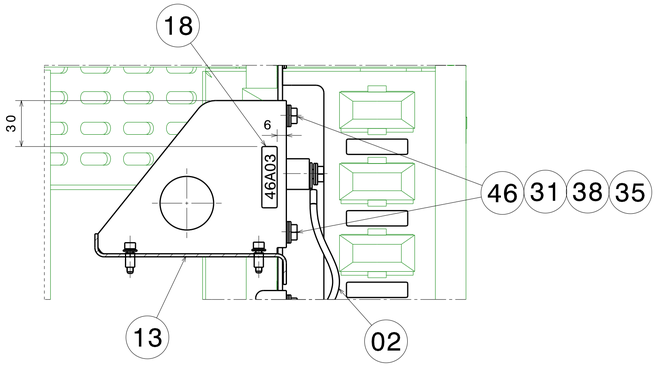

J-J
1:3

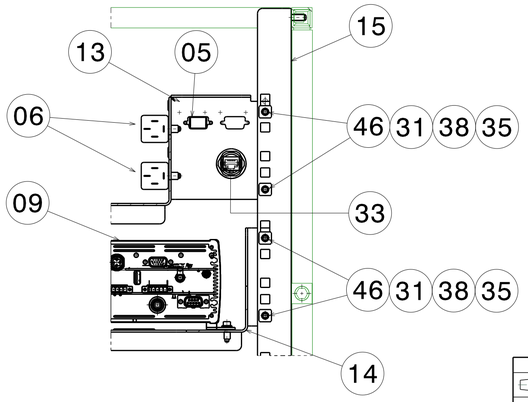

I-I
1:2

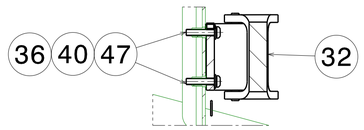

1:2	Prepared	2016-02-08	56194
	Checked	2016-12-16	25118
	Approved	2016-12-16	25127
	Date	Name	
	en	mm	
CAF CONSTRUCCIONES Y AUXILIAR DE FERROCARRILES, S.A.	ISO 2768-cK DIN ISO 13920-BF		

LTCL EQUIP.ASSEMBLY

Q.53.83.516 D 2/2

The reproduction, distribution and utilization of this document as well as the communication of its contents to others without express authorization is prohibited. Offenders will be held liable for the payment of damages. All rights reserved in the event of the grant of a patent, utility model or design.